Pioneer sound.vision.soul

Service Manual

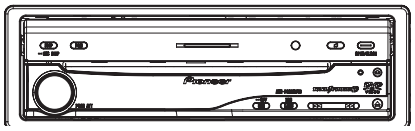

AVH-P5950DVD/XN/RC

ORDER NO.
CRT3916

DVD AV RECEIVER

AVH-P5950DVD/XN/RC
AVH-P5950DVD/XN/RD
AVH-P5950DVD/XN/RI

This service manual should be used together with the following manual(s):

Model No.	Order No.	Mech.Module	Remarks
CX-3212	CRT3896	MS5	DVD Mech. Module : Circuit Descriptions, Mech. Descriptions, Disassembly

"DTS" and "DTS Digital Surround" are registered trademarks of Digital Theater Systems,Inc.

Dolby noise reduction manufactured under license from Dolby Laboratories Licensing Corporation.

"Dolby" and the double-D symbol are trademarks of Dolby Laboratories Licensing Corporation.

For details, refer to "Important Check Points for Good Servicing".

PIONEER CORPORATION 4-1, Meguro 1-chome, Meguro-ku, Tokyo 153-8654, Japan
PIONEER ELECTRONICS (USA) INC. P.O. Box 1760, Long Beach, CA 90801-1760, U.S.A.
PIONEER EUROPE NV Haven 1087, Keetberglaan 1, 9120 Melsele, Belgium
PIONEER ELECTRONICS ASIACENTRE PTE. LTD. 253 Alexandra Road, #04-01, Singapore 159936
ⓒ**PIONEER CORPORATION 2007**

K-ZZU. MAY 2007 Printed in Japan

SAFETY INFORMATION

CAUTION

This service manual is intended for qualified service technicians; it is not meant for the casual do-it-yourselfer. Qualified technicians have the necessary test equipment and tools, and have been trained to properly and safely repair complex products such as those covered by this manual.
Improperly performed repairs can adversely affect the safety and reliability of the product and may void the warranty. If you are not qualified to perform the repair of this product properly and safely, you should not risk trying to do so and refer the repair to a qualified service technician.

1. Safety Precautions for those who Service this Unit.

・ Follow the adjustment steps in the service manual when servicing this unit. When check - ing or adjusting the emitting power of the laser diode exercise caution in order to get safe, reliable results.

Caution:

1. During repair or tests, minimum distance of 13 cm from the focus lens must be kept.
2. During repair or tests, do not view laser beam for 10 seconds or longer.

2. The triangular label is attached to the mechanism unit frame.

CAUTION
This product contains a laser diode of higher class than 1. To ensure continued safety, do not remove any covers or attempt to gain access to the inside of the product.
Refer all servicing to qualified personnel.

The following caution label appears on your unit.

小心：
本产品包含有1级以上的镭射二极管。为了保证安全，切勿打开任何机盖或者试图接触本机内部，必要时应请求专业技术人员提供服务。
下面的提醒标签贴于本机上。
位置：本机后面板上。

On the top of the player.

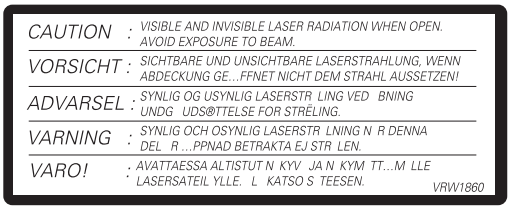

在机器的机壳上。

WARNING!

The AEL (accessible emission level)of the laser power output is less than CLASS 1 but the laser component is capable of emitting radiation exceeding the limit for CLASS 1.
A specially instructed person should do servicing operation of the apparatus.

Laser diode characteristics

Wave length:
DVD:640 nm to 660 nm
CD:770 nm to 810 nm
DVD : 2.48 mW(Emitting period :9 sec.)
CD : 705 μW(Emitting period : unlimited)

Additional Laser Caution

Transistors Q1101 and Q1102 in PCB drive the laser diodes for DVD and CD respectively. When Q1101 or Q1102 is shorted between their terminals, the laser diodes for DVD or CD will radiate beam. If the top cover is removed with no disc loaded while such short-circuit is continued, the naked eyes may be exposed to the laser beam.

CAUTION

Danger of explosion if battery is incorrectly replaced.
Replaced only with the same or equivalent type recommended by the manufacture.
Discord used batteries according to the manufacture's instructions.

[Important Check Points for Good Servicing]

In this manual, procedures that must be performed during repairs are marked with the below symbol.
Please be sure to confirm and follow these procedures.

1. Product safety

Please conform to product regulations (such as safety and radiation regulations), and maintain a safe servicing environment by following the safety instructions described in this manual.

① Use specified parts for repair.

Use genuine parts. Be sure to use important parts for safety.

② Do not perform modifications without proper instructions.

Please follow the specified safety methods when modification(addition/change of parts) is required due to interferences such as radio/TV interference and foreign noise.

③ Make sure the soldering of repaired locations is properly performed.

When you solder while repairing, please be sure that there are no cold solder and other debris.
Soldering should be finished with the proper quantity. (Refer to the example)

④ Make sure the screws are tightly fastened.

Please be sure that all screws are fastened, and that there are no loose screws.

⑤ Make sure each connectors are correctly inserted.

Please be sure that all connectors are inserted, and that there are no imperfect insertion.

⑥ Make sure the wiring cables are set to their original state.

Please replace the wiring and cables to the original state after repairs.
In addition, be sure that there are no pinched wires, etc.

⑦ Make sure screws and soldering scraps do not remain inside the product.

Please check that neither solder debris nor screws remain inside the product.

⑧ There should be no semi-broken wires, scratches, melting, etc. on the coating of the power cord.

Damaged power cords may lead to fire accidents, so please be sure that there are no damages.
If you find a damaged power cord, please exchange it with a suitable one.

⑨ There should be no spark traces or similar marks on the power plug.

When spark traces or similar marks are found on the power supply plug, please check the connection and advise on secure connections and suitable usage. Please exchange the power cord if necessary.

⑩ Safe environment should be secured during servicing.

When you perform repairs, please pay attention to static electricity, furniture, household articles, etc. in order to prevent injuries.
Please pay attention to your surroundings and repair safely.

2. Adjustments

To keep the original performance of the products, optimum adjustments and confirmation of characteristics within specification.
Adjustments should be performed in accordance with the procedures/instructions described in this manual.

3. Lubricants, Glues, and Replacement parts

Use grease and adhesives that are equal to the specified substance.
Make sure the proper amount is applied.

4. Cleaning

For parts that require cleaning, such as optical pickups, tape deck heads, lenses and mirrors used in projection monitors, proper cleaning should be performed to restore their performances.

5. Shipping mode and Shipping screws

To protect products from damages or failures during transit, the shipping mode should be set or the shipping screws should be installed before shipment. Please be sure to follow this method especially if it is specified in this manual.

CONTENTS

SAFETY INFORMATION 2
1. SERVICE PRECAUTIONS 6
2. SPECIFICATIONS 8
2.1 SPECIFICATIONS 8
2.2 DISC/CONTENT FORMAT 9
2.3 PANEL FACILITIES 10
2.4 CONNECTION DIAGRAM 15
3. BASIC ITEMS FOR SERVICE 16
3.1 CHECK POINTS AFTER SERVICING 16
3.2 PCB LOCATIONS 17
3.3 JIG CONNECTION DIAGRAM 18
4. BLOCK DIAGRAM 20
5. DIAGNOSIS 32
5.1 OPERATIONAL FLOW CHART 32
5.2 CONNECTOR FUNCTION DESCRIPTION 33
5.3 BACK END SECTION FLOW 34
6. SERVICE MODE 56
6.1 DVD TEST MODE 56
7. DISASSEMBLY 60
8. EACH SETTING AND ADJUSTMENT 67
8.1 DVD ADJUSTMENT 67
8.2 VIDEO LEVEL ADJUSTMENT 72
8.3 MOTHER UNIT ADJUSTMENT 74
8.4 INVERTER ADJUSTMENT 76
8.5 MONITOR ADJUSTMENT 78
8.6 MONITOR TEST MODE 84
8.7 CALIBRATION TEST 90
9. EXPLODED VIEWS AND PARTS LIST 98
9.1 PACKING 98
9.2 EXTERIOR(1) 100
9.3 EXTERIOR(2) 102
9.4 EXTERIOR(3) 106
9.5 EXTERIOR(4) 108
9.6 DVD MECHANISM MODULE 110
10. SCHEMATIC DIAGRAM 112
10.1 MOTHER UNIT(SYSTEM PART)(GUIDE PAGE) 112
10.2 MOTHER UNIT(POWER SUPPLY PART)(GUIDE PAGE) 118
10.3 KEYBOARD UNIT 124
10.4 MONITOR PCB(MONITOR PART)(GUIDE PAGE) 126
10.5 MONITOR PCB(OSD & µCON PART)(GUIDE PAGE) 132
10.6 DVD CORE UNIT(1/2)(GUIDE PAGE) 138
10.7 DVD CORE UNIT(2/2) 144
10.8 COMPOUND UNIT(A) AND COMPOUND UNIT(B) 146
10.9 RCA PCB 147
10.10 UPPER PCB 148
10.11 OPT PCB 149
10.12 MAIN PCB UNIT(SERVICE), SWITCH PCB UNIT AND VOLUME PCB UNIT 150
10.13 WAVEFORMS 152
11. PCB CONNECTION DIAGRAM 154
11.1 MOTHER UNIT 154
11.2 KEYBOARD UNIT 158
11.3 MONITOR PCB 160
11.4 DVD CORE UNIT 164
11.5 COMPOUND UNIT(A) AND COMPOUND UNIT(B) 168
11.6 RCA PCB 169
11.7 UPPER PCB 170
11.8 OPT PCB 171
11.9 MAIN PCB UNITSERVICE), SWITCH PCB UNIT AND VOLUME PCB UNIT 172
12. ELECTRICAL PARTS LIST 173

1. SERVICE PRECAUTIONS

● Service Precautions

1) You should conform to the regulations governing the product (safety, radio and noise, and other regulations), and should keep the safety during servicing by following the safety instructions described in this manual.
2) Be careful in handling ICs. Some ICs such as MOS type are so fragile that they can be damaged by electrostatic induction.
3) Before disassembling the unit, be sure to turn off the power. Unplugging and plugging the connectors during power-on mode may damage the ICs inside the unit.
4)To protect the pickup unit from electrostatic discharge during servicing, take an appropriate treatment (shorting-solder) by referring to "the DISASSEMBLY" .
5) After replacing the pickup unit, be sure to skew adjustment.
6)During disassembly, be sure to turn the power off since an internal IC might be destroyed when a connector is plugged or unplugged.
7) In case the internal fuse has blown, check the voltage of the rear stage.
8) Handling instructions for touch panel
Please handle the touch panel with care as it contains glass.
Dropping or giving a strong shock may break the panel.
Wear gloves, etc. to protect your hands from the glass edges that are not deburred.
9) Remove a small board (2 screws) provided for pulling out an RCA line, before removing the mother board.
10) Hot areas
Red area: Hot area. Be careful not to burn yourself

Moter Unit(Side A)

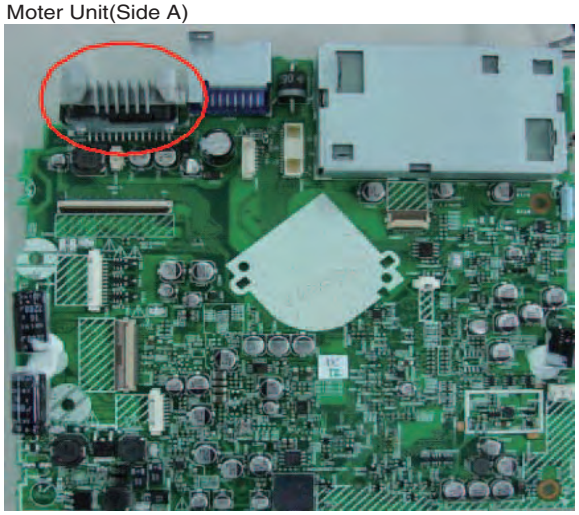

Moter Unit(Side B)

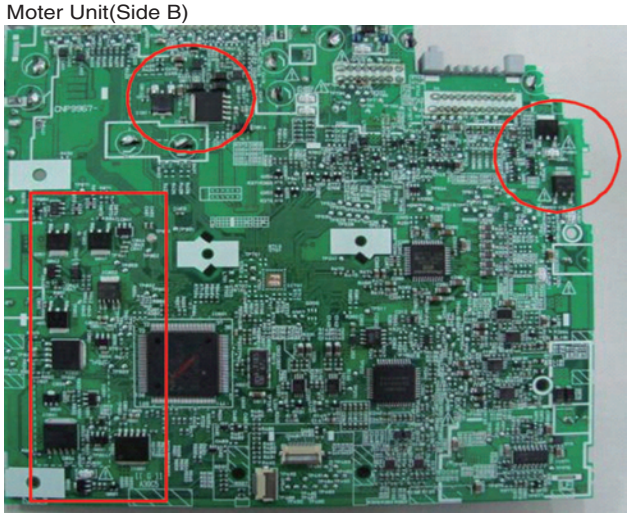

Red-circled area: The heat from hot parts on the B-side of the board is removed from the product bottom through a heat transfer sheet.
Be careful not to burn yourself with the hot area.

Bottom

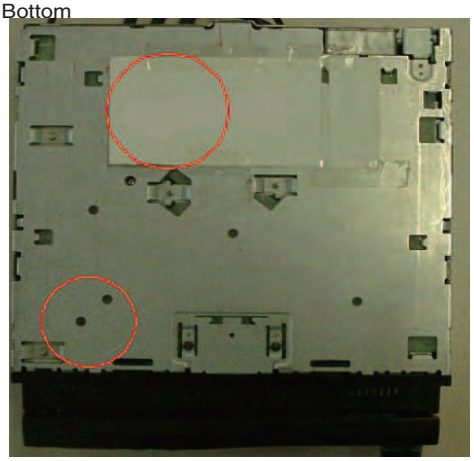

DVD is a trademark of DVD Format/Logo Licensing Corporation.

NOTES ON SOLDERING

- For environmental protection, lead-free solder is used on the printed circuit boards mounted in this unit.
  Be sure to use lead-free solder and a soldering iron that can meet specifications for use with lead-free solders for repairs accompanied by reworking of soldering.

- Compared with conventional eutectic solders, lead-free solders have higher melting points, by approximately 40°C.
  Therefore, for lead-free soldering, the tip temperature of a soldering iron must be set to around 373°C in general, although the temperature depends on the heat capacity of the PC board on which reworking is required and the weight of the tip of the soldering iron.

Compared with eutectic solders, lead-free solders have higher bond strengths but slower wetting times and higher melting temperatures (hard to melt/easy to harden).

The following lead-free solders are available as service parts:

- Parts numbers of lead-free solder:
  GYP1006 1.0 in dia.
  GYP1007 0.6 in dia.
  GYP1008 0.3 in dia.

2. SPECIFICATIONS

2.1 SPECIFICATIONS

General

Rated power source ..... 14.4 V DC
(allowable voltage range: 12.0 V to ´4.4 V DC)
Grounding system ..... Negative type
Max. current consumption
..... 10.0 A
Backup current ..... 5 mA or less

Dimensions (W × H × D):
DIN
Chassis ..... 178 × 50 × 160 mm
Nose ..... 188 × 58 × 33 mm
D
Chassis ..... 178 × 50 × 165 mm
Nose ..... 170 × 46 × 28 mm
Weight ..... 2.4 kg

Display

Screen size/aspect ratio ..... 7.0 inch wide/16:9
(effective display area: 154 × 87 mm)
Pixels ..... 336 960 (1 440 × 234)
Type ..... TFT active matrix, transmissive type
Color system ..... NTSC/PAL/PAL-M/SECAM compatible
Storage temperature range
..... -20 °C to +80 °C
Angle adjustment ..... 50° to 110°
(initial settings: 90°)

Audio

Maximum power output ..... 50 W × 4
50 W × 2/4 Ω + 70 W × 1/2 Ω (for subwoofer)
Continuous power output ... 22 W × 4 (50 Hz to 15 000 Hz, 5% THD, 4 Ω load, both channels driven)
Load impedance ..... 4 Ω to 8 Ω × 4
4 Ω to 8 Ω × 2 + 2 Ω × 1
Preout max output level/output impedance
..... 4.0 V/100 Ω
Equalizer (7-Band Graphic Equalizer):
Frequency ..... 50/125/315/800/2k/5k/12.5k Hz
Gain ..... ±12 dB
Loudness contour:
Low ..... +3.5 dB (100 Hz), +3 dB (10 kHz)
Mid ..... +10 dB (100 Hz), +6.5 dB (10 kHz)
High ..... +11 dB (100 Hz), +´1 dB (10 kHz)
(volume: –30 dB)
HPF:
Frequency ..... 50/63/80/100/125 Hz
Slope ..... –12 dB/oct
Subwoofer (mono):
Frequency ..... 50/63/80/100/125 Hz
Slope ..... –18 dB/oct
Gain ..... +6 dB to –24 dB
Phase ..... Normal/Reverse
Bass boost:
Gain ..... +12 dB to 0 dB

DVD Player

System ..... DVD video, DVD-VR, Video CD, CD, WMA, MP3, AAC, DivX system
Usable discs ..... DVD video, Video CD, CD, CD-R/RW, DVD-R/RW
Region number:
for Middle East Asian and South African models
..... 2
for Southeast Asian models
..... 3
for South American and Oceanian models
..... 4
Signal format:
Sampling frequency ..... 44.1/48/96 kHz
Number of quantization bits
..... ´6/20/24; linear
Frequency response ..... 5 Hz to 44 000 Hz (with DVD, at sampling frequency 96 kHz)
Signal-to-noise ratio ..... 97 dB (1 kHz) (IEC-A network)
(CD: 96 dB (1 kHz) (IEC-A network))
Dynamic range ..... 95 dB (1 kHz)
(CD: 94 dB (1 kHz))
Distortion ..... 0.008 % (´ kHz)
Output level:
Video ..... ´.0 Vp-p/75 Ω (±0.2 V)
Number of channels ..... 2 (stereo)
MP3 decoding format ..... MPEG-1 & 2 Audio Layer 3
WMA decoding format ..... Ver. 7, 7.1, 8, 9, 10 (2ch audio)
(Windows Media Player)
AAC decoding format ..... MPEG-4 AAC (iTunes® encoded only)
DivX decoding format ..... Home Theater Ver. 3, 4, 5.2 (.avi .divx)

FM tuner

Frequency range ..... 87.5 MHz to 108.0 MHz
Usable sensitivity ..... 8 dBf (0.7 µV/75 Ω, mono, S/N: 30 dB)
Signal-to-noise ratio ..... 75 dB (IEC-A network)
Distortion ..... 0.3 % (at 65 dBf, 1 kHz, stereo)
0.1 % (at 65 dBf, 1 kHz, mono)
Frequency response ..... 30 Hz to 15 000 Hz (±3 dB)
Stereo separation ..... 45 dB (at 65 dBf, 1 kHz)

AM tuner

Frequency range ..... 531 kHz to ´ 602 kHz (9 kHz)
530 kHz to ´ 640 kHz (´0 kHz)
Usable sensitivity ..... 18 µV (S/N: 20 dB)
Signal-to-noise ratio ..... 65 dB (IEC-A network)

Infrared remote control

Wavelength ..... 945 nm
Output ..... typ: 10 mw/sr per Infrared LED

2.2 DISC/CONTENT FORMAT

Playable discs

DVD, Video CD and CD discs that display the logos shown below can be played back on this player.

DVD video

Video CD

CD

Notes

- DVD is a trademark of DVD Format/Logo Licensing Corporation.
- This player can only play back discs bearing the marks shown above.

2.3 PANEL FACILITIES

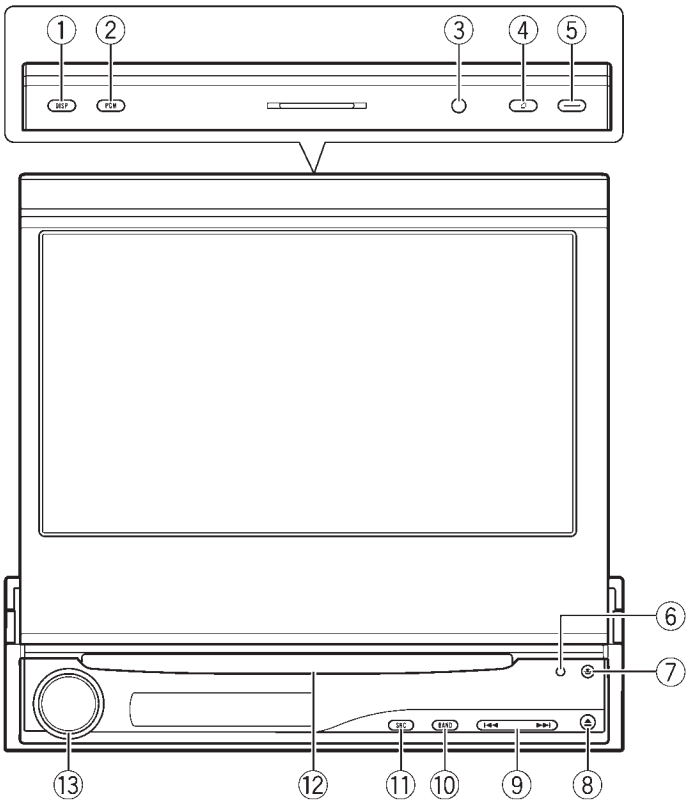

What's What

Head unit

① **DISPLAY button**
Press to turn the information display on or off when the video is displayed.
Press and hold to switch between the displays on the sub-display.
- When a rear view camera video is displayed, press and hold **DISPLAY** return to the source display.

② **PGM button**
Press to operate the preprogrammed functions for each source.

③ **Ambient light sensor**
Senses ambient light. This system automatically adjusts the brightness of the display to compensate for ambient light.

④ **FLIP DOWN button**
Press to turn the LCD panel horizontal temporarily from upright position.

⑤ **OPEN/CLOSE button**
Press to open or close the LCD panel.

⑥ **RESET button**
Press to return to the factory settings (initial settings).

⑦ **DETACH button**
Press to remove the front panel from the head unit.

⑧ **EJECT button**
Press to eject a disc from this unit.

⑨ **I◄◄/►►I button**
Press to do manual seek tuning, fast forward, reverse and track search controls.

⑩ **BAND/ESC button**
Press to select among three FM bands and one AM band and to cancel the control mode of functions.

⑪ **SOURCE button**
This unit is turned on by selecting a source. Press to cycle through all the available sources.

⑫ **Disc loading slot**
Insert a disc to play.

⑬ **VOLUME/ATT button**
Rotate it to increase or decrease the volume.
Press to quickly lower the volume level, by about 90%. Press once more to return to the original volume level.

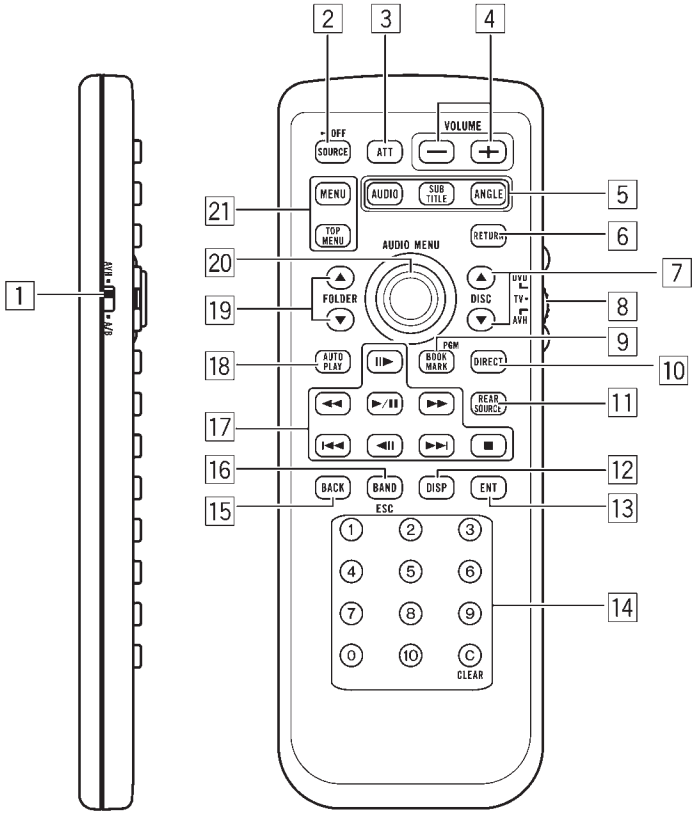

Remote control

	Button names	AVH mode	DVD mode
1	Remote control selection switch	Switch to change the setting of the remote control.	
2	**SOURCE** button	Press to cycle through all the available sources. Press and hold to turn the source off.	
3	**ATT** button	Press to quickly lower the volume level, by about 90%. Press once more to return to the original volume level.	
4	**VOLUME** buttons	Press to increase or decrease the volume.	
5	**AUDIO** button	Press to change the audio language during DVD playback.	
	SUBTITLE button	Press to change the subtitle language during DVD playback.	
	ANGLE button	Press to change the viewing angle during DVD playback.	
6	**RETURN** button	Press to display the PBC (playback control) menu during PBC playback.	

	Button names	AVH mode	DVD mode
7	▲/▼ buttons (**DISC**)	Not used.	**Remote control code: AVH or B** Not used. **Remote control code: A** Press to select the next/previous disc.
8	Remote control operation mode switch	Switch the operation mode between **AVH**, **DVD** and **TV** modes. Normally, set to **AVH**. For details, refer to *Using the remote control operation mode switch* on the next page.	
9	**BOOKMARK** button/ **PGM** button	Press to operate the preprogrammed functions for each source. (Refer to *Using the PGM button* on page 56.)	Press to turn the bookmark function on or off when your DVD player features bookmark function. For details, refer to DVD player's operation manual.
10	**DIRECT** button	Not used.	
11	**REAR SOURCE** button	Not used.	**Remote control code: AVH** Not used. **Remote control code: A or B** Press to turn the DVD player on or off.
12	**DISPLAY** button	Press to select different displays.	**Remote control code: AVH** Not used. **Remote control code: A or B** Press to select different displays.
13	**ENTERTAINMENT** button	Not used.	
14	**0** to **10** buttons, **CLEAR** button	Press **0** to **10** to input numbers. Buttons **1** to **6** can operate the preset tuning for the tuner or disc changing for DVD player or multi-CD player. Press **CLEAR** to clear the input numbers.	Press to select a menu item on the Video CDs featuring PBC (playback control).
15	**BACK** button	Press to return to the previous display.	Not used.
16	**BAND/ESC** button	Press to select the tuner band when tuner is selected as a source. Also used to cancel the control mode of functions. Press to switch mode between compressed audio and audio data (CD-DA) when playing discs with compressed audio and audio data (CD-DA) such as CD-EXTRA and MIXED-MODE CDs.	Press to switch mode between compressed audio and audio data (CD-DA) when playing discs with compressed audio and audio data (CD-DA) such as CD-EXTRA and MIXED-MODE CDs.

	Button names	AVH mode	DVD mode
17	**PLAY/PAUSE** (►/II) button	Press to switch sequentially between playback and pause.	
	REVERSE (◄◄) button	Press to perform fast reverse.	
	FORWARD (►►) button	Press to perform fast forward.	
	PREVIOUS (I◄◄) button	Press to return to the previous track (chapter).	
	NEXT (►►I) button	Press to go to the next track (chapter).	
	STEP (II►/◄II) buttons	Press to move ahead one frame at a time during DVD/VideoCD playback. Press and hold for one second to activate slow playback.	
	STOP (■) button	Press to stop playback.	
18	**AUTO PLAY** button	Press to turn the DVD auto-playback function on or off.	
19	▲/▼ buttons (**FOLDER**)	Press to select the next/previous folder.	
20	Joystick	Move to do fast forward, reverse and track search controls. Click to recall **MENU**.	Move to select a menu on the DVD menu.
21	**MENU** button	Press to display the DVD menu during DVD playback.	
	TOP MENU button	Press to return to the top menu during DVD playback.	

Using the remote control operation mode switch

There are three remote control operation modes on the remote control.

AVH mode operation

When operating this unit by remote control, the mode is normally switched to **AVH**.

DVD mode operation

If you switch the mode to **DVD**, the joystick and **0** to **10** operations are changed for DVD player.

● When you want to operate the following functions, switch the mode to DVD:

- When operating the DVD menu by using the joystick.
- When operating the PBC menu by using **0** to **10**.

TV mode operation

TV operations available with a Pioneer TV tuner (e.g. GEX-P5750TV(P)) can be controled with **AVH** mode. **TV** mode is not used with this unit.

- For details concerning operation, refer to the TV tuner's operation manuals.

Fastening the front panel

If you do not plan to detach the front panel, the front panel can be fastened with supplied screws.

- **Fix the front panel to the unit using screws after removing the trim ring.**

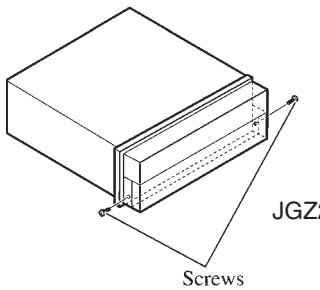

JGZ20P070FTC

2.4 CONNECTION DIAGRAM

● Connection Diagram

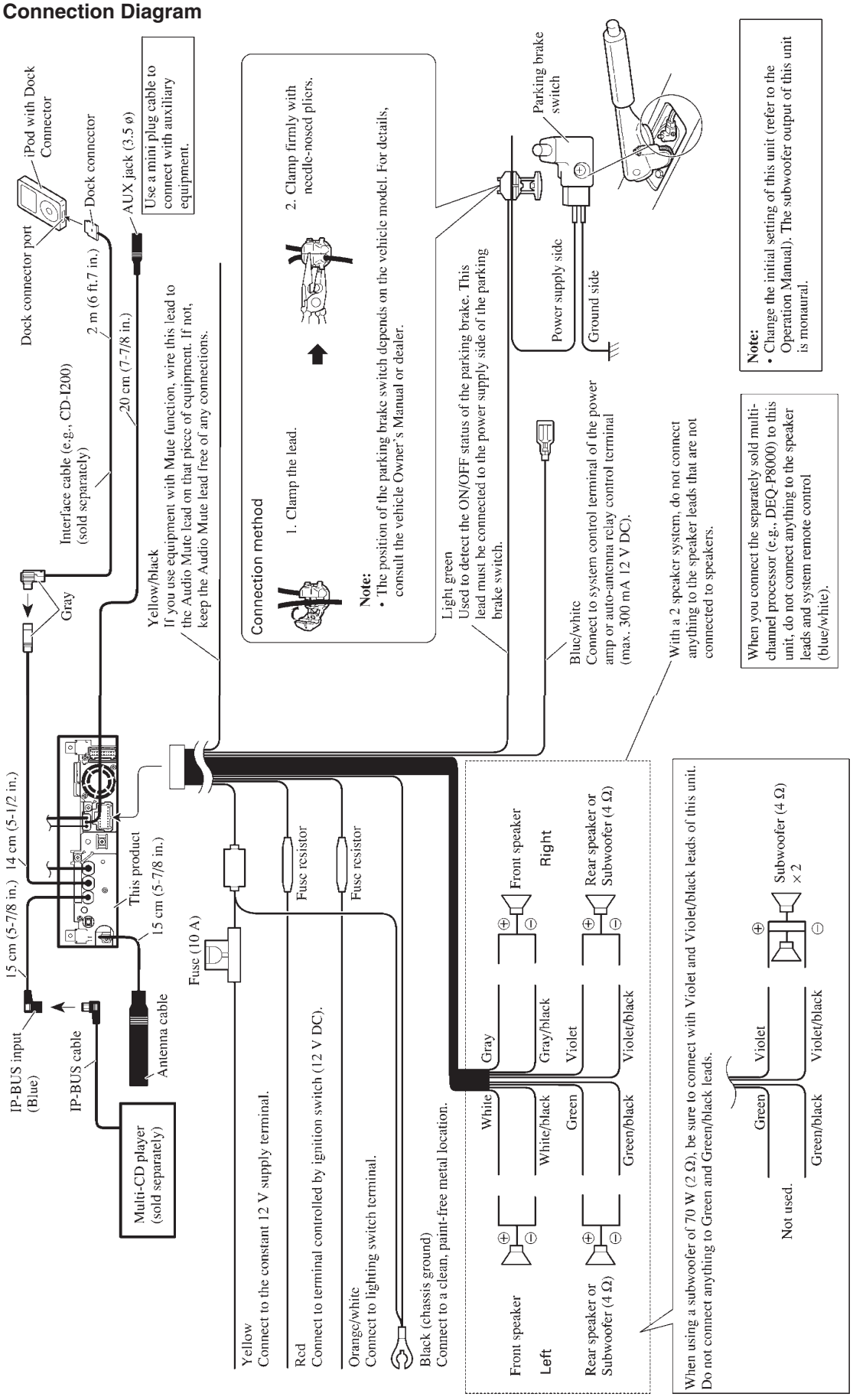

3. BASIC ITEMS FOR SERVICE
3.1 CHECK POINTS AFTER SERVICING

CHECK POINTS AFTER SERVICING (AVH)

To keep the product quality after servicing, please confirm following check points.

No.		Procedures	Check points	Remark
1		Confirm whether the customer complain has been solved. If the customer complain occurs with the specific media, use it for the operation check.	The customer complain must not be reappeared. Display, video, audio and operations must be normal.	
2	Flap-mecha	Check the operation of the flap mechanism.	The flap mechanism operation must be smooth without making the noise and scratches.	When flap-mecha exists
3	DVD	Measure playback error rates at the innermost and outermost tracks by using the test mode with the following disc. DVD test disc (GGV1025)	Deterioration of mecha-drive can be checked. The error rates must be less than 2.5e-4.	
4	DVD	Play back a DVD. (Menu operation; Title/chapter search)	Display, video, audio and operations must be normal.	
5	CD	Play back a CD. (Track search)	Display, audio and operations must be normal.	
6	FM/AM tuner	Check FM/AM tuner action. (Seek, Preset) Switch band to check both FM and AM.	Display, audio and operations must be normal.	
7	TV tuner	Check TV tuner action. (Seek; Preset)	Display, video, audio and operations must be normal.	
8		Check whether no disc is inside the product.	The media used for the operating check must be ejected.	
9		Appearance check	No scratches or dirt on its appearance after receiving it for service.	

See the table below for the items to be checked regarding video and audio:

Item to be checked regarding video	**Item to be checked regarding audio**
Block-noise	Distortion
Horizontal noise	Noise
Dot noise	Volume too low
Disturbed image (video jumpiness)	Volume too high
Too dark	Volume fluctuating
Too bright	Sound interrupted
Mottled color	

3.2 PCB LOCATIONS

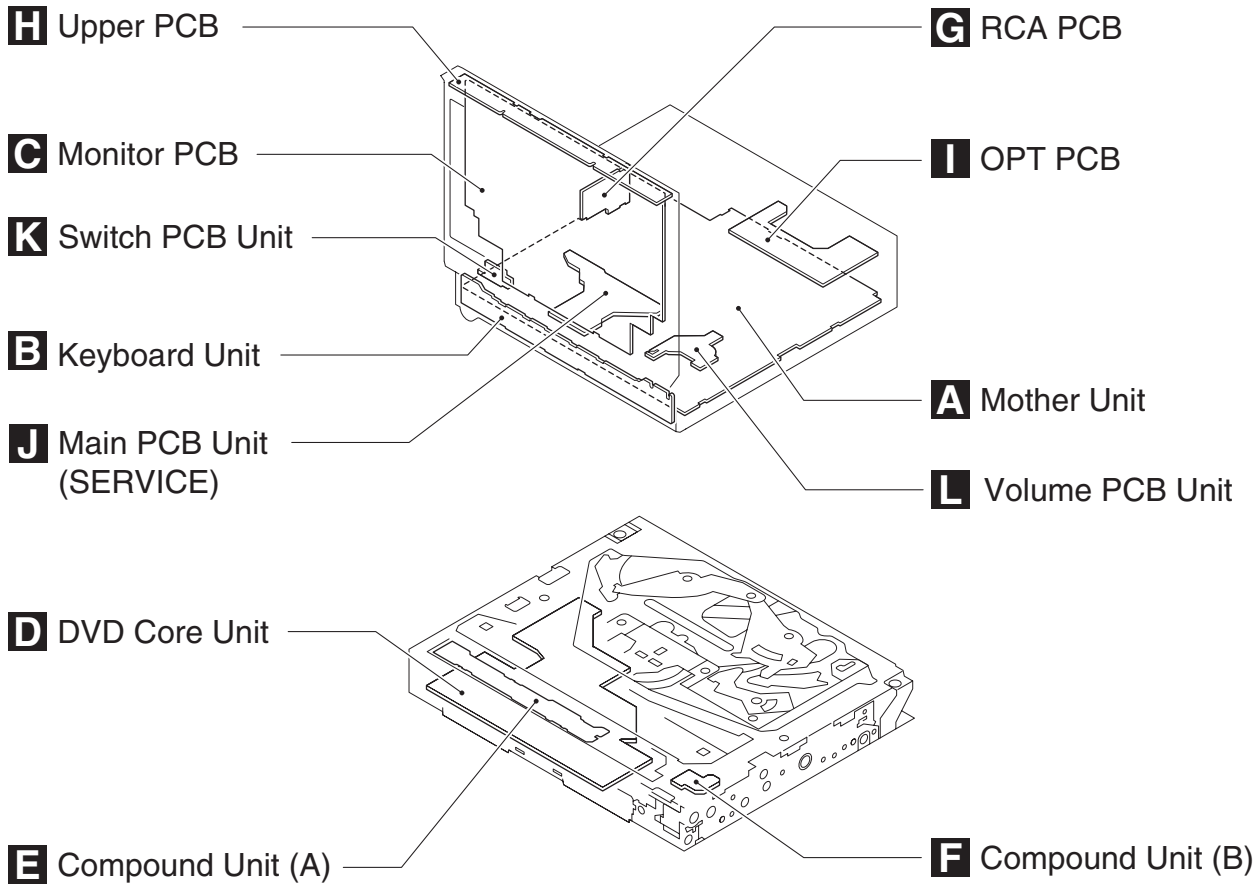

Unit Number : (RC,RD,RI)
Unit Name : Mother Unit

Unit Number :
Unit Name : Keyboard Unit

Unit Number : CWN2330
Unit Name : Monitor Unit

Monitor Unit
Consists of
Monitor PCB
Upper PCB

Unit Number : YWX5005
Unit Name : DVD Core Unit

Unit Number : CWX3154
Unit Name : Compound Unit(A)

Unit Number : CWX3394
Unit Name : Compound Unit(B)

DVD Amp Assy
Consists of
Mother Unit
OPT PCB
RCA PCB

Unit Number : CXX2316
Unit Name : Main PCB Unit(SERVICE)

Unit Number : CZW5029
Unit Name : Switch PCB Unit

Unit Number : CZW5028
Unit Name : Volume PCB Unit

3.3 JIG CONNECTION DIAGRAM

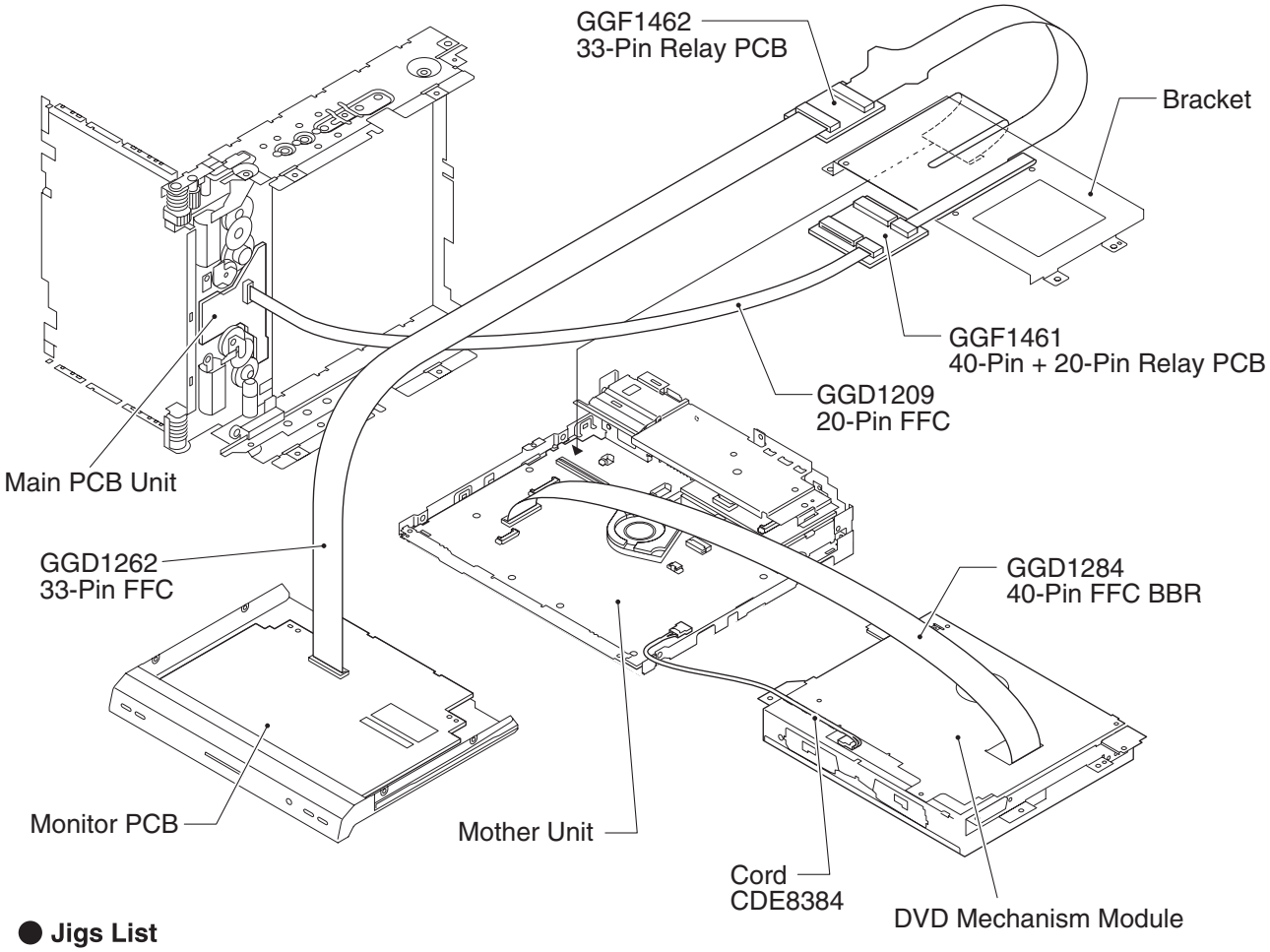

● **Jigs List**

Name	Jig No.	Remarks
40-Pin FFC BBR	GGD1284	DVD Mechanism Module <--> DVD Amp Assy
33-Pin Relay PCB	GGF1462	DVD Amp Assy <--> Monitor Unit
33-Pin FFC	GGD1262	DVD Amp Assy <--> Monitor Unit
40-Pin + 20-Pin Relay PCB	GGF1461	DVD Amp Assy <--> Main PCB Unit
20-Pin FFC	GGD1209	DVD Amp Assy <--> Main PCB Unit
Disc	GGV1018	Skew adjustment
TORX driver(T2)	GGK1095	Skew adjustment
Bond	GEM1033	Skew adjustment

● Grease List

Name	Jig No.	Remarks
Grease	GEM1024	DVD Mechanism Module and Chassis
Grease	GEM1043	DVD Mechanism Module and Chassis
Grease	GEM1045	DVD Mechanism Module
Grease	GEM1050	DVD Mechanism Module
Locking agents	1401M	DVD Mechanism Module (1401M:produced by THREE BOND)
Grease	GEM1011	Chassis
Grease	GEM1047	Chassis
Grease	GEM1071	Chassis
Grease	GEM1072	Chassis

CLEANING

Before shipping out the product, be sure to clean the following portions by using the prescribed cleaning tools:

Portions to be cleaned	Cleaning tools
DVD pickup lenses	Cleaning liquid : GEM1004 Cleaning paper : GED-008

Portions to be cleaned	Cleaning tools
Fans	Cleaning paper : GED-008

4. BLOCK DIAGRAM

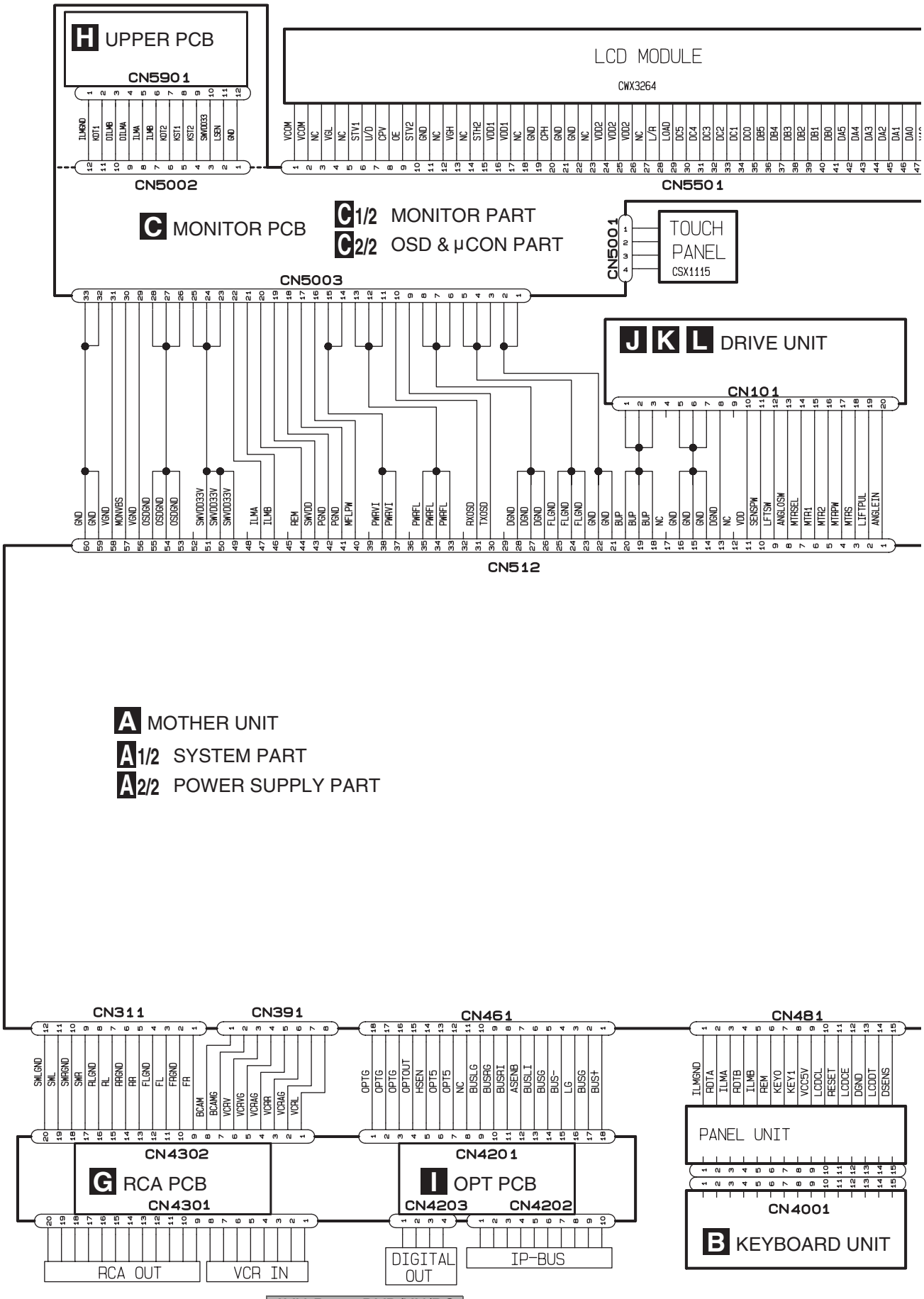

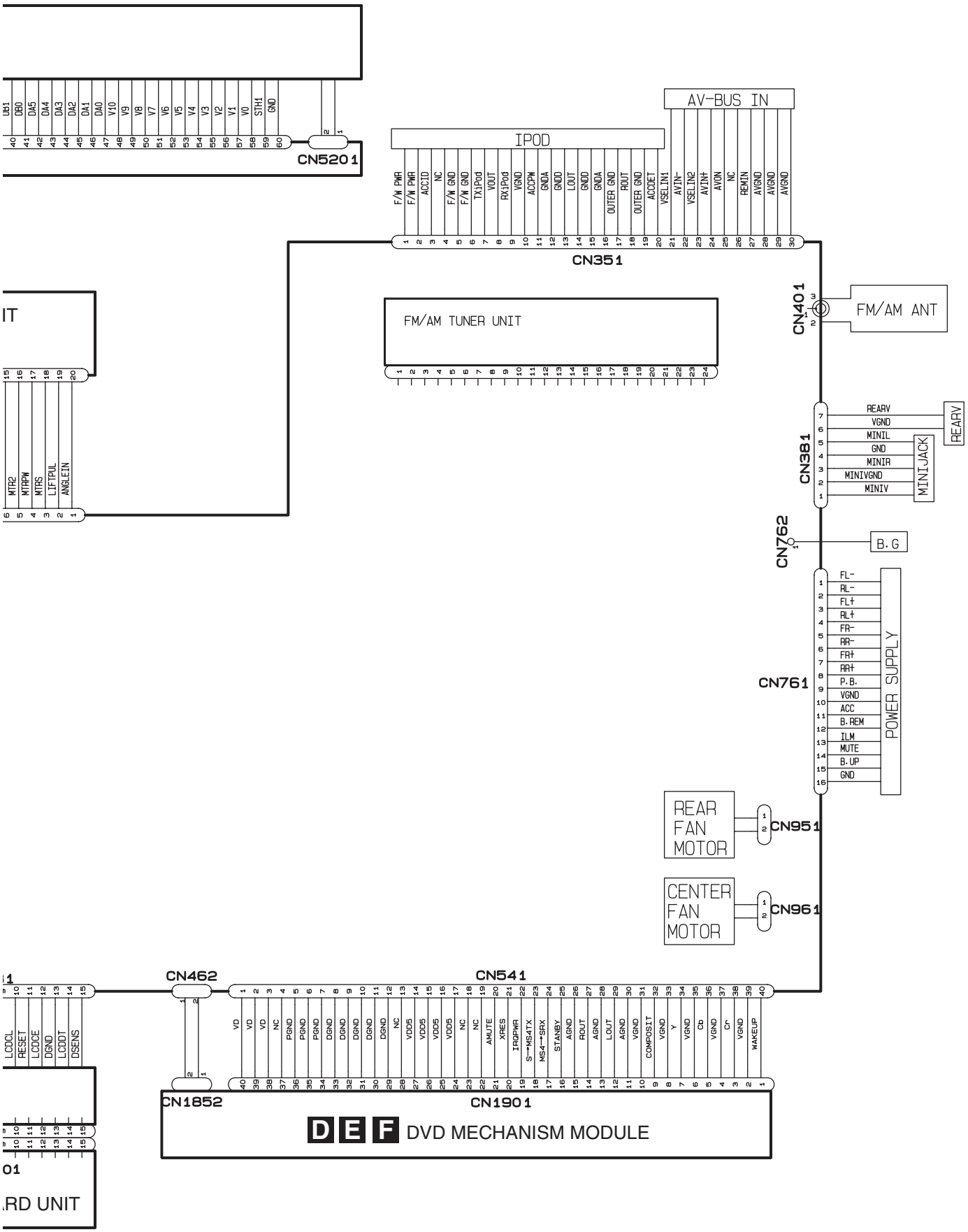
CN5201
IPOD
AV-BUS IN
CN351
FM/AM TUNER UNIT
CN401
FM/AM ANT
CN381
REARV
MINIJACK
CN762
B.G
CN761
POWER SUPPLY
REAR FAN MOTOR
CN951
CENTER FAN MOTOR
CN961
CN462
CN541
CN1852
CN1901
DEF DVD MECHANISM MODULE

A MOTHER UNIT (1/2)

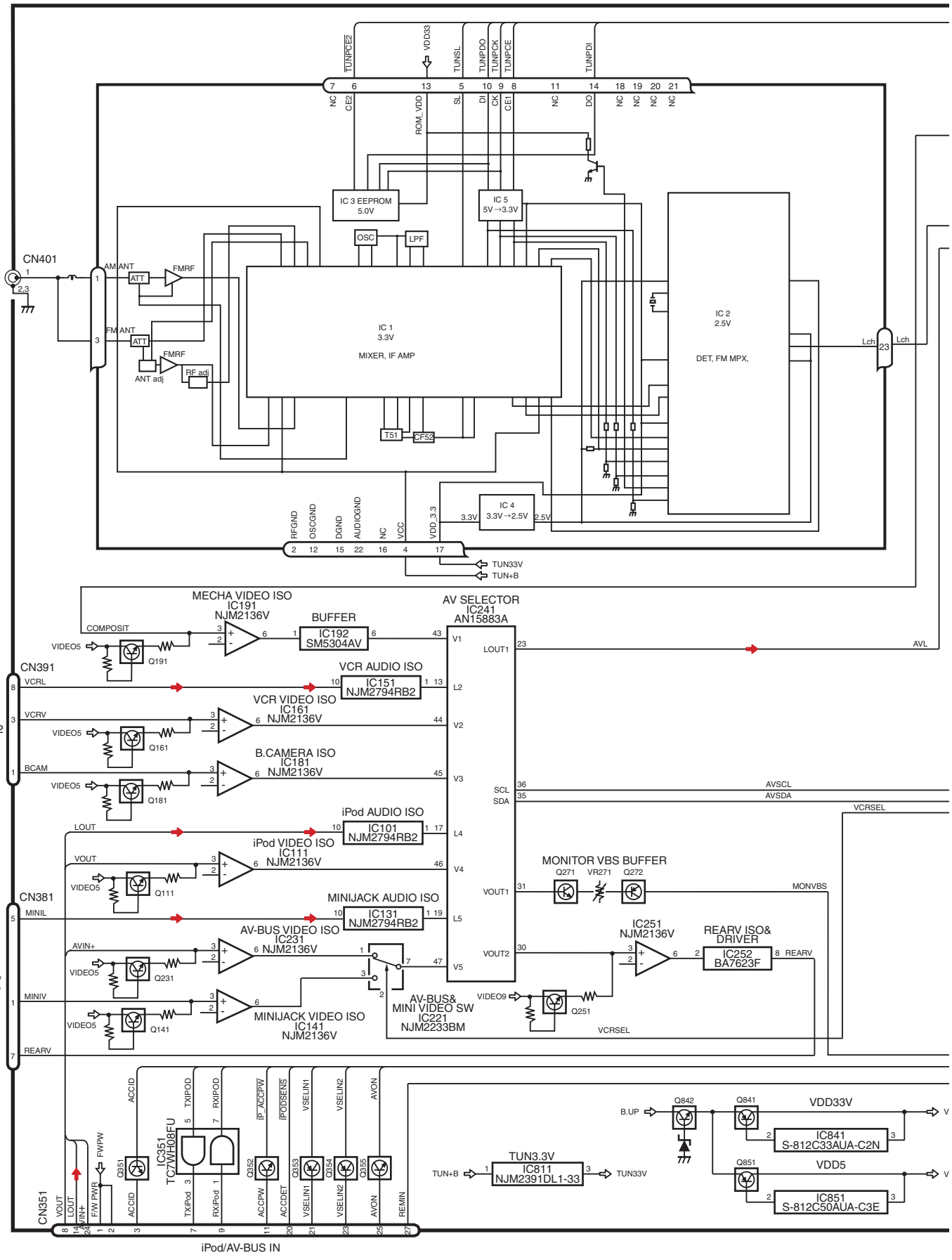

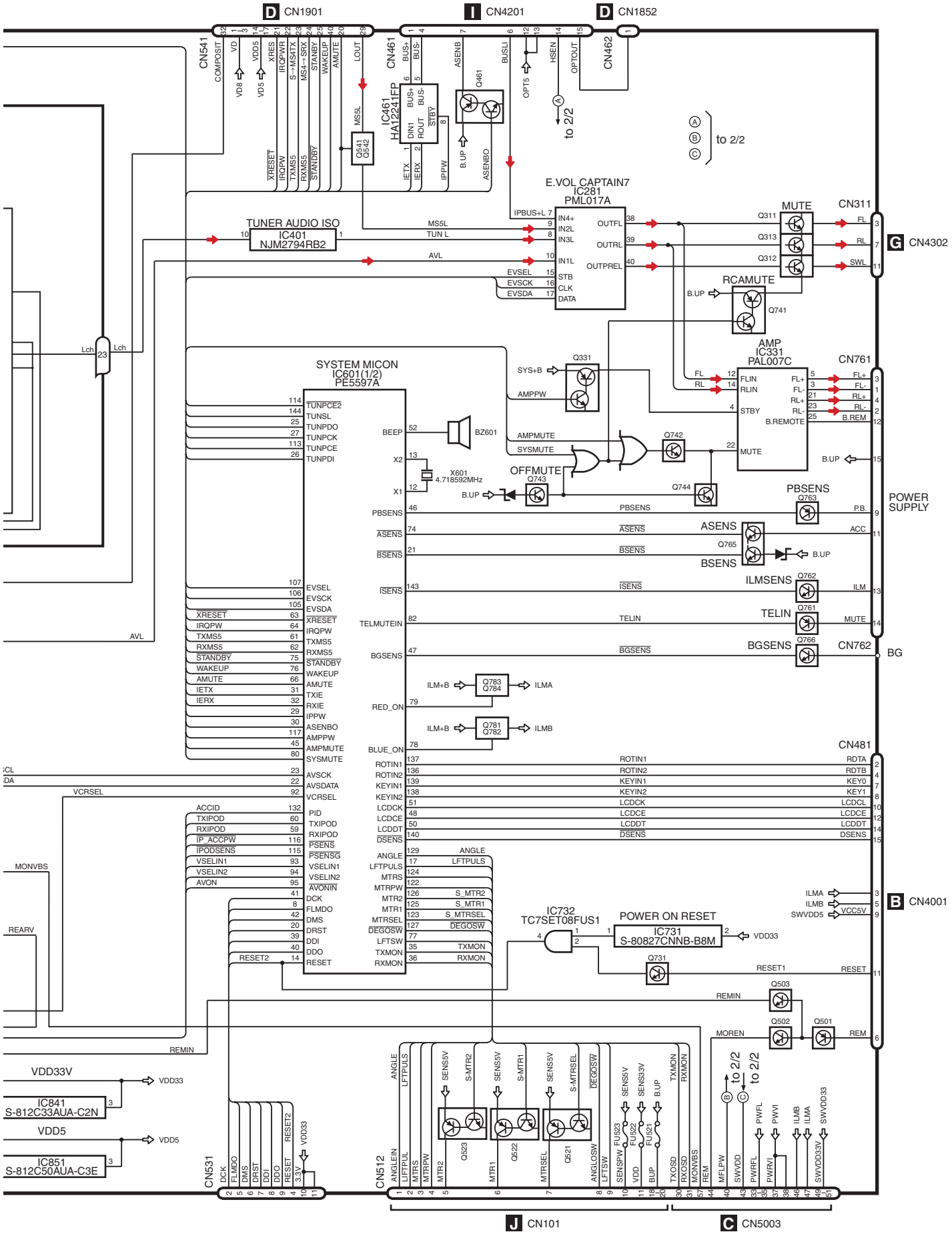
D CN1901
I CN4201
D CN1852
CN541
CN461
IC461
HA12241FP
CN462
to 2/2
E.VOL CAPTAIN7
IC281
PML017A
TUNER AUDIO ISO
IC401
NJM2794RB2
MUTE
CN311
G CN4302
RCAMUTE
AMP
IC331
PAL007C
CN761
SYSTEM MICON
IC601(1/2)
PE5597A
BZ601
X601
4.718592MHz
OFFMUTE
PBSENS
ASENS
BSENS
ILMSENS
TELIN
BGSENS
CN762
BG
POWER
SUPPLY
CN481
B CN4001
IC732
TC7SET08FUS1
POWER ON RESET
IC731
S-80827CNNB-B8M
IC841
S-812C33AUA-C2N
IC851
S-812C50AUA-C3E
CN531
CN512
J CN101
C CN5003

A MOTHER UNIT (2/2)

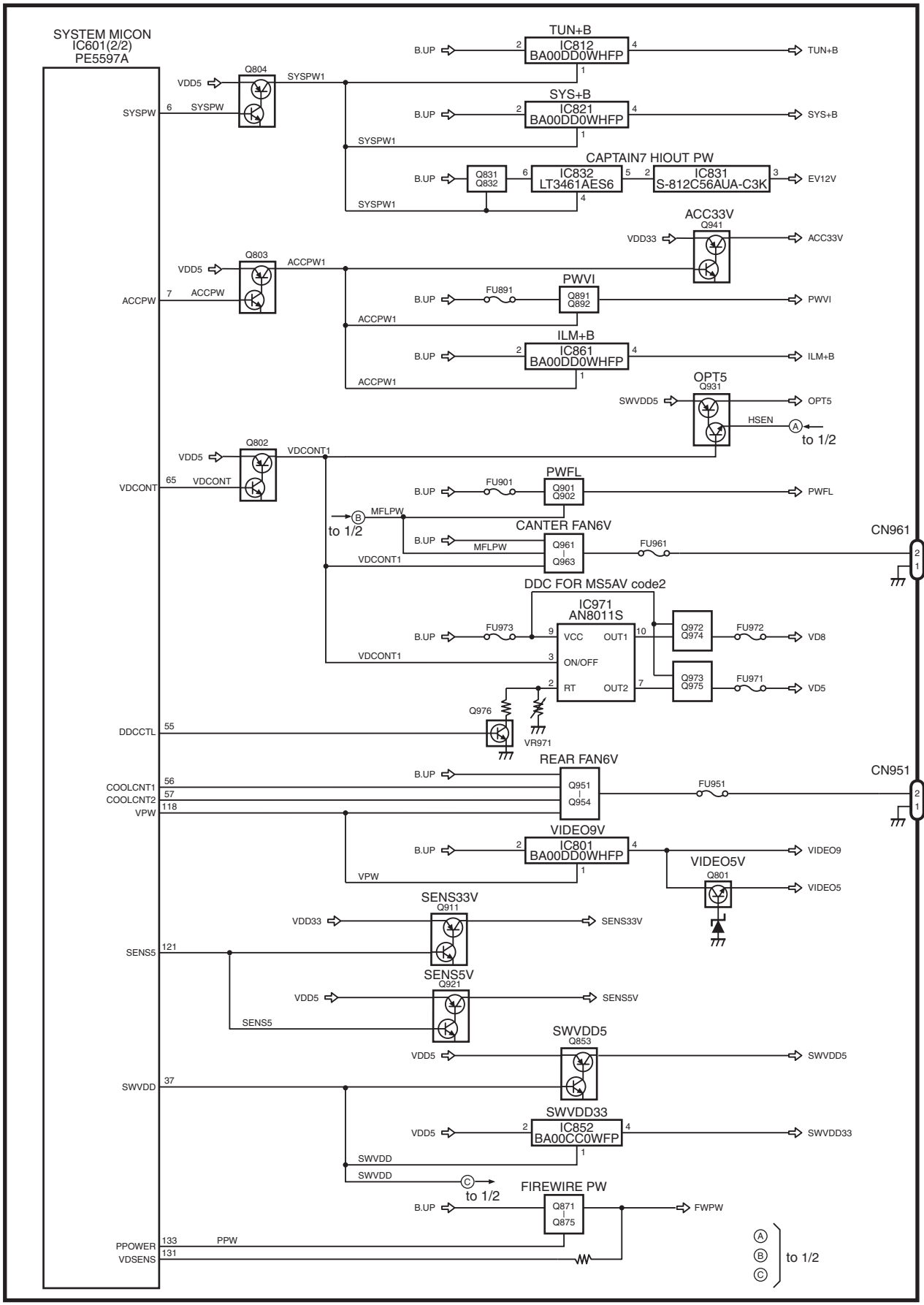

G RCA PCB

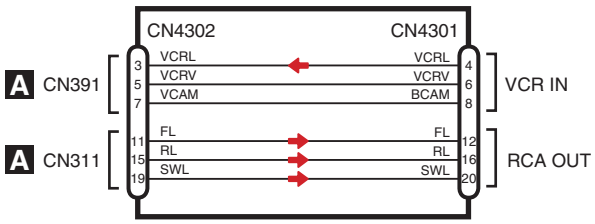

I OPT PCB

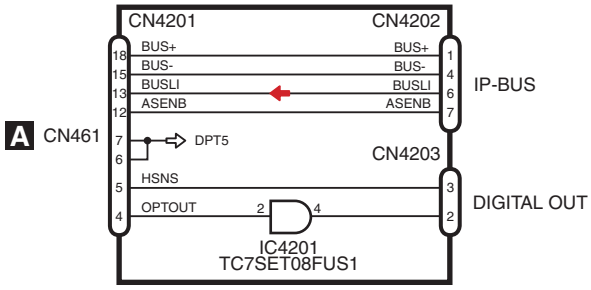

B KEYBOARD UNIT

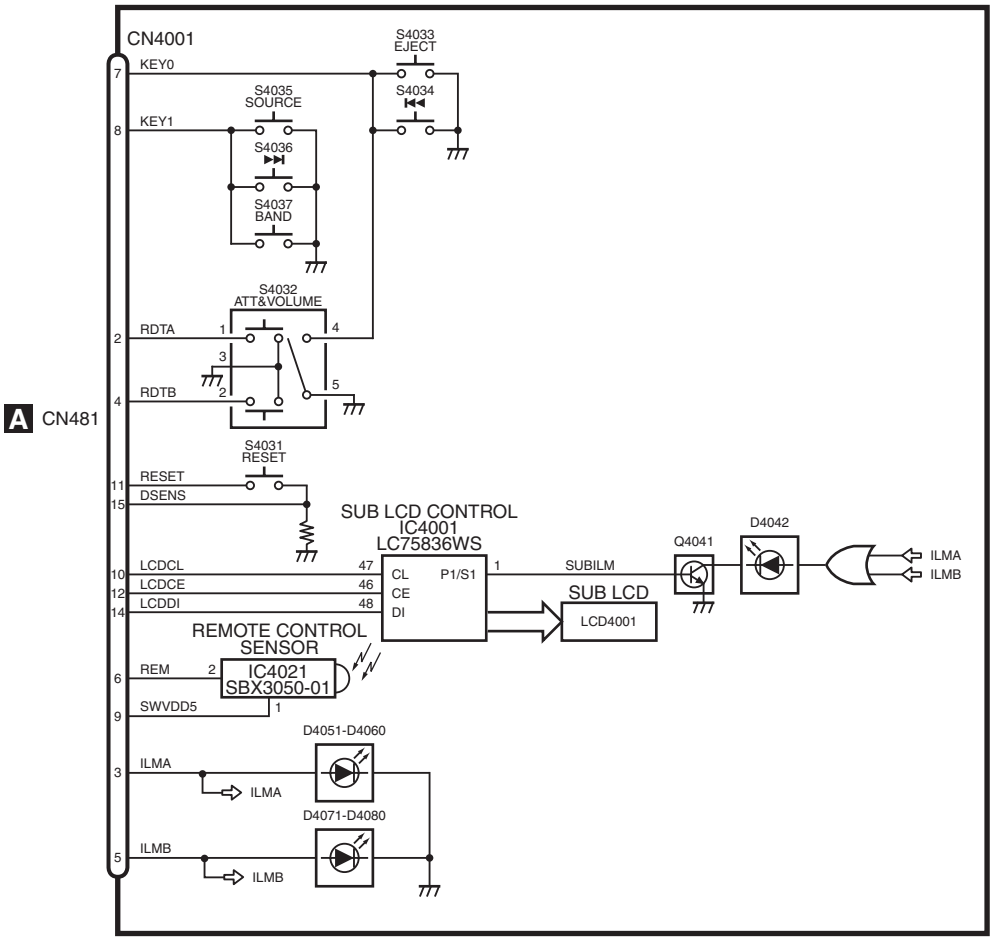

C MONITOR PCB

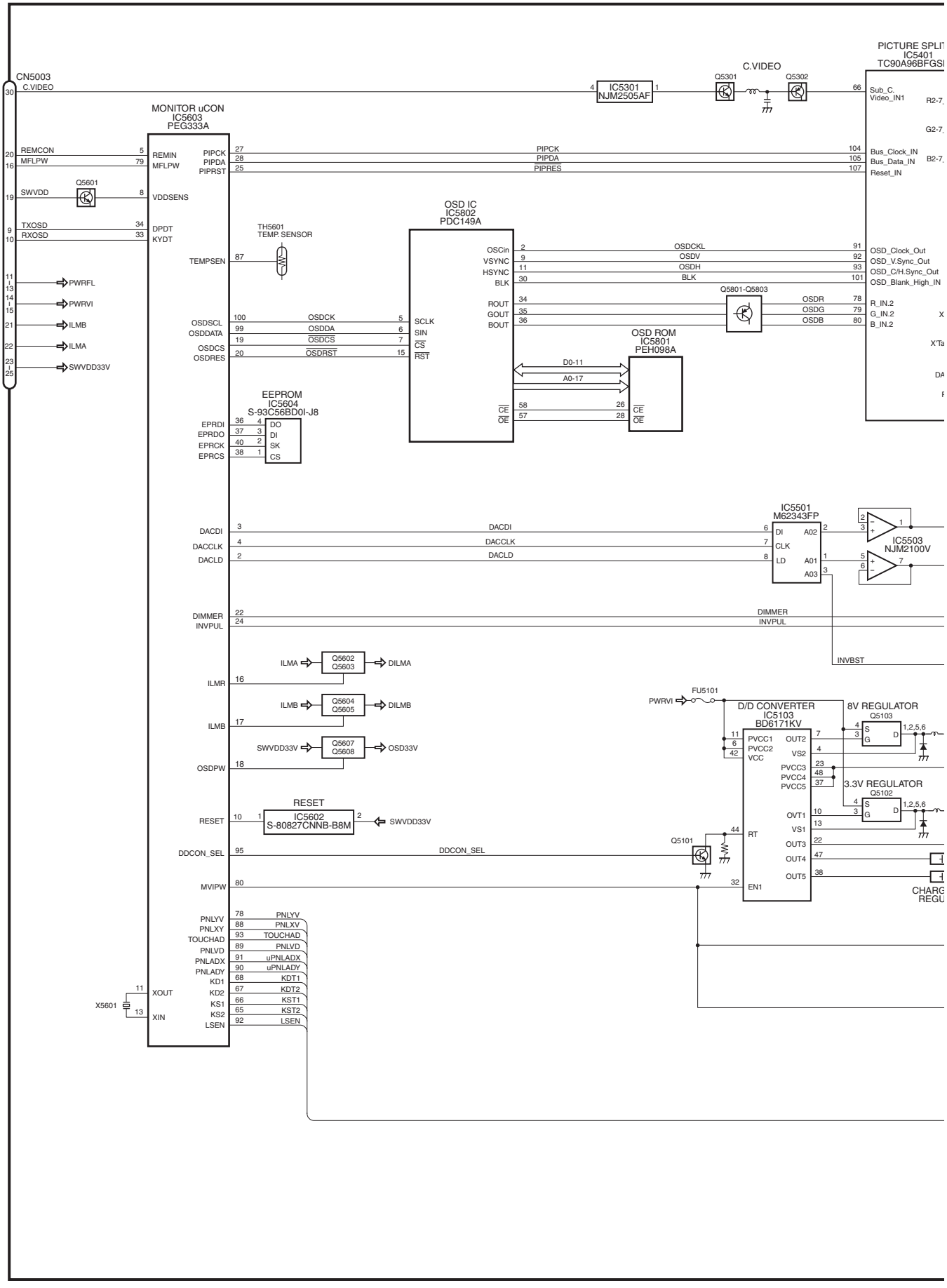

A CN512

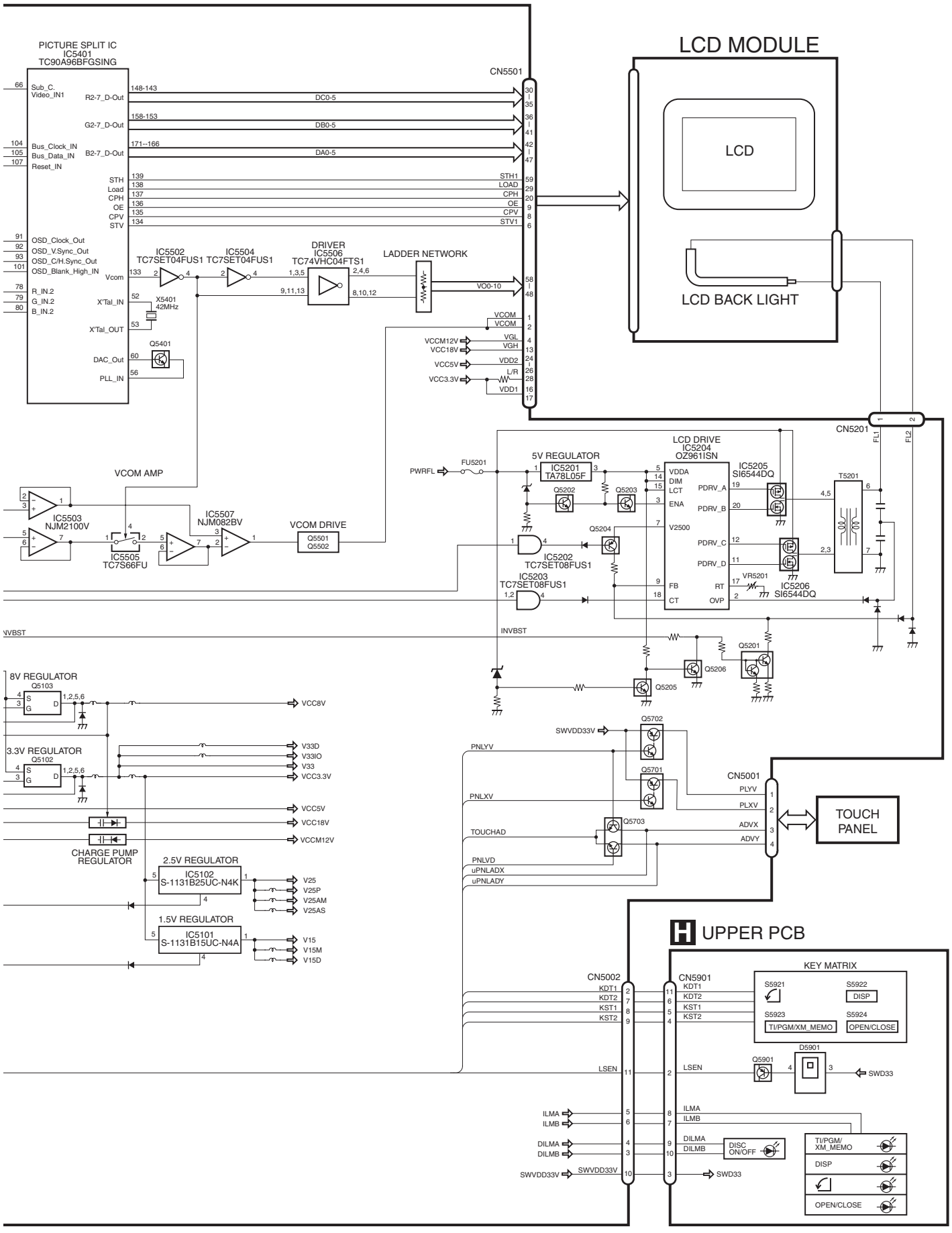
PICTURE SPLIT IC
IC5401
TC90A96BFGSING
LCD MODULE
LCD
LCD BACK LIGHT
CN5501
Sub_C.
Video_IN1
R2-7_D-Out
G2-7_D-Out
B2-7_D-Out
Bus_Clock_IN
Bus_Data_IN
Reset_IN
DC0-5
DB0-5
DA0-5
STH
Load
CPH
OE
CPV
STV
OSD_Clock_Out
OSD_V.Sync_Out
OSD_C/H.Sync_Out
OSD_Blank_High_IN
R_IN.2
G_IN.2
B_IN.2
Vcom
X'Tal_IN
X'Tal_OUT
DAC_Out
PLL_IN
X5401
42MHz
Q5401
IC5502
TC7SET04FUS1
IC5504
TC7SET04FUS1
DRIVER
IC5506
TC74VHC04FTS1
LADDER NETWORK
VO0-10
VCOM
VGL
VGH
VDD2
L/R
VDD1
VCCM12V
VCC18V
VCC5V
VCC3.3V
VCOM AMP
IC5503
NJM2100V
IC5505
TC7S66FU
IC5507
NJM082BV
VCOM DRIVE
Q5501
Q5502
CN5201
FL1
FL2
LCD DRIVE
IC5204
OZ961ISN
5V REGULATOR
IC5201
TA78L05F
FU5201
PWRFL
Q5202
Q5203
Q5204
IC5202
TC7SET08FUS1
IC5203
TC7SET08FUS1
IC5205
SI6544DQ
IC5206
SI6544DQ
T5201
VR5201
VDDA
DIM
LCT
ENA
V2500
FB
CT
PDRV_A
PDRV_B
PDRV_C
PDRV_D
RT
OVP
INVBST
Q5205
Q5206
Q5201
8V REGULATOR
Q5103
VCC8V
3.3V REGULATOR
Q5102
V33D
V33IO
V33
VCC3.3V
VCC5V
VCC18V
VCCM12V
CHARGE PUMP
REGULATOR
2.5V REGULATOR
IC5102
S-1131B25UC-N4K
V25
V25P
V25AM
V25AS
1.5V REGULATOR
IC5101
S-1131B15UC-N4A
V15
V15M
V15D
SWVDD33V
Q5702
PNLYV
Q5701
PNLXV
TOUCHAD
Q5703
PNLVD
uPNLADX
uPNLADY
CN5001
PLYV
PLXV
ADVX
ADVY
TOUCH
PANEL
UPPER PCB
CN5002
KDT1
KDT2
KST1
KST2
LSEN
ILMA
ILMB
DILMA
DILMB
SWVDD33V
CN5901
KEY MATRIX
S5921
S5922
DISP
S5923
TI/PGM/XM_MEMO
S5924
OPEN/CLOSE
D5901
Q5901
SWD33
DISC
ON/OFF
TI/PGM/
XM_MEMO
DISP
OPEN/CLOSE

D DVD CORE UNIT

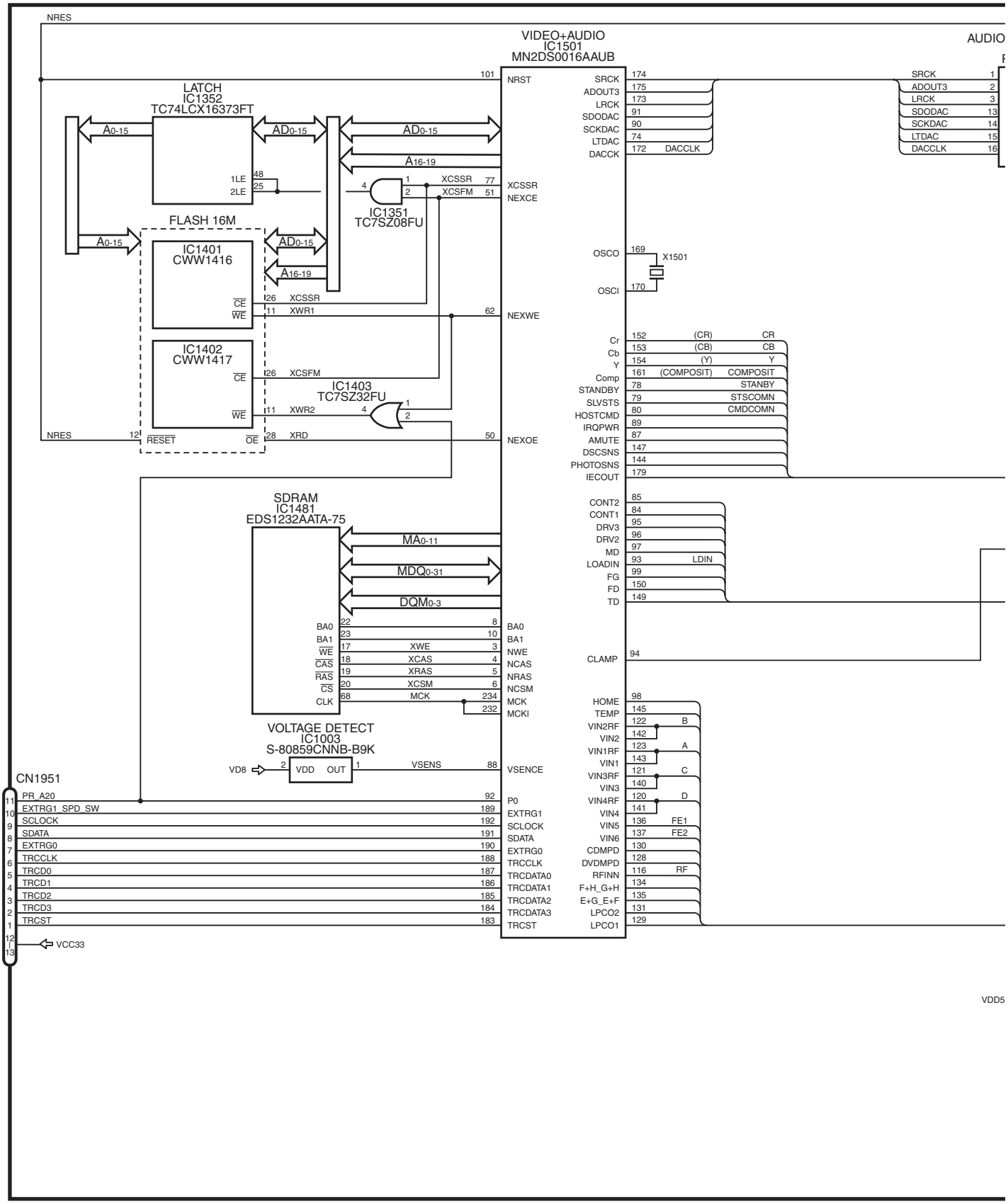

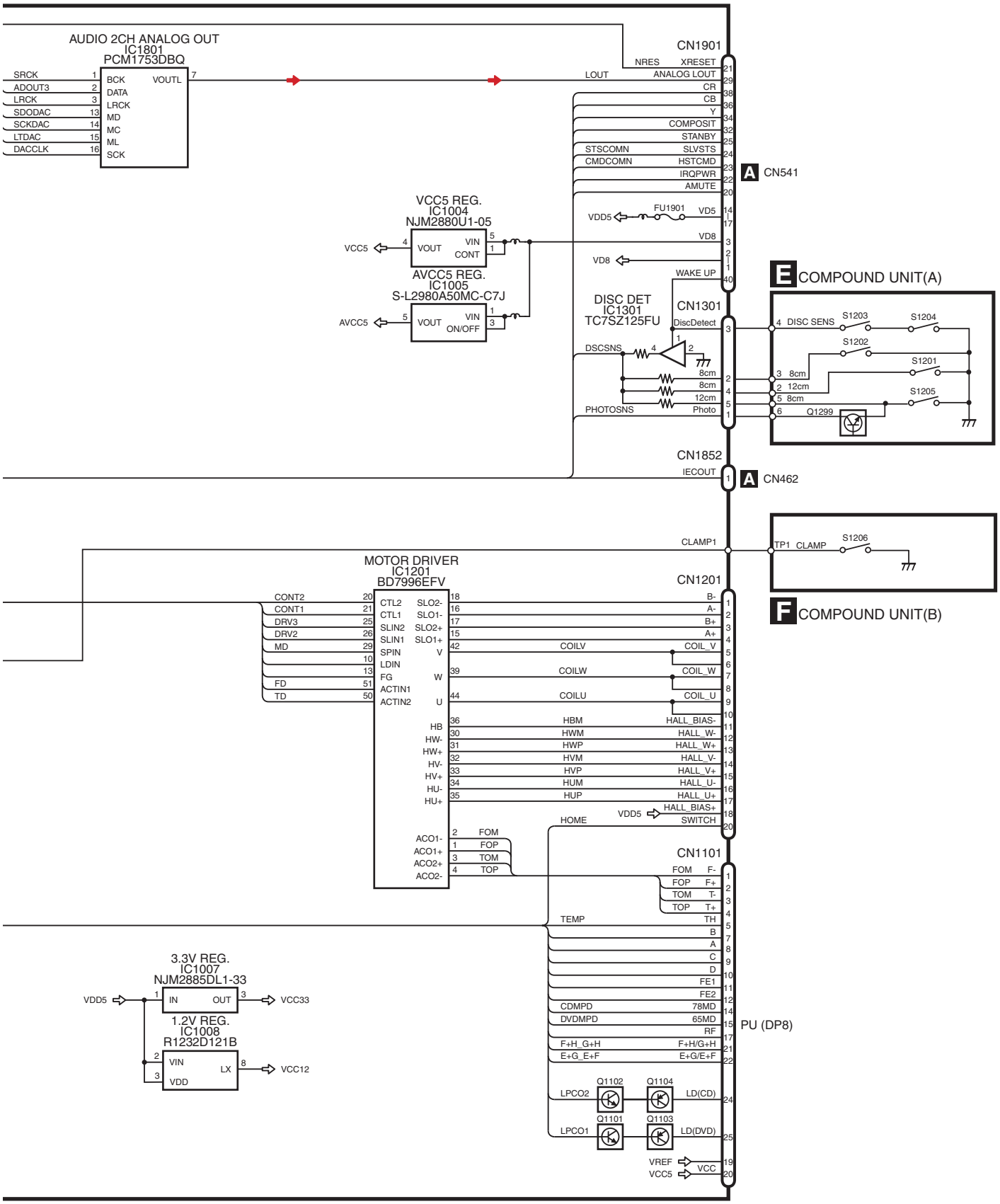
AUDIO 2CH ANALOG OUT
IC1801
PCM1753DBQ
SRCK
ADOUT3
LRCK
SDODAC
SCKDAC
LTDAC
DACCLK
BCK
DATA
LRCK
MD
MC
ML
SCK
VOUTL
LOUT
CN1901
NRES
XRESET
ANALOG LOUT
CR
CB
Y
COMPOSIT
STANBY
STSCOMN
SLVSTS
CMDCOMN
HSTCMD
IRQPWR
AMUTE
A CN541
VCC5 REG.
IC1004
NJM2880U1-05
VCC5
VOUT
VIN
CONT
AVCC5 REG.
IC1005
S-L2980A50MC-C7J
AVCC5
VOUT
VIN
ON/OFF
VDD5
FU1901
VD5
VD8
WAKE UP
DISC DET
IC1301
TC7SZ125FU
CN1301
DiscDetect
DSCSNS
8cm
8cm
12cm
PHOTOSNS
Photo
E COMPOUND UNIT(A)
DISC SENS
S1203
S1204
S1202
S1201
S1205
Q1299
CN1852
IECOUT
A CN462
CLAMP1
TP1 CLAMP
S1206
F COMPOUND UNIT(B)
MOTOR DRIVER
IC1201
BD7996EFV
CONT2
CONT1
DRV3
DRV2
MD
FD
TD
CTL2
CTL1
SLIN2
SLIN1
SPIN
LDIN
FG
ACTIN1
ACTIN2
SLO2-
SLO1-
SLO2+
SLO1+
V
W
U
HB
HW-
HW+
HV-
HV+
HU-
HU+
ACO1-
ACO1+
ACO2+
ACO2-
CN1201
B-
A-
B+
A+
COILV
COIL_V
COILW
COIL_W
COILU
COIL_U
HBM
HALL_BIAS-
HWM
HALL_W-
HWP
HALL_W+
HVM
HALL_V-
HVP
HALL_V+
HUM
HALL_U-
HUP
HALL_U+
HALL_BIAS+
SWITCH
VDD5
HOME
FOM
FOP
TOM
TOP
CN1101
F-
F+
T-
T+
TEMP
TH
B
A
C
D
FE1
FE2
CDMPD
78MD
DVDMPD
65MD
RF
F+H_G+H
F+H/G+H
E+G_E+F
E+G/E+F
PU (DP8)
Q1102
Q1104
LPCO2
LD(CD)
Q1101
Q1103
LPCO1
LD(DVD)
VREF
VCC5
VCC
3.3V REG.
IC1007
NJM2885DL1-33
VDD5
IN
OUT
VCC33
1.2V REG.
IC1008
R1232D121B
VIN
VDD
LX
VCC12

J MAIN PCB UNIT(SERVICE)

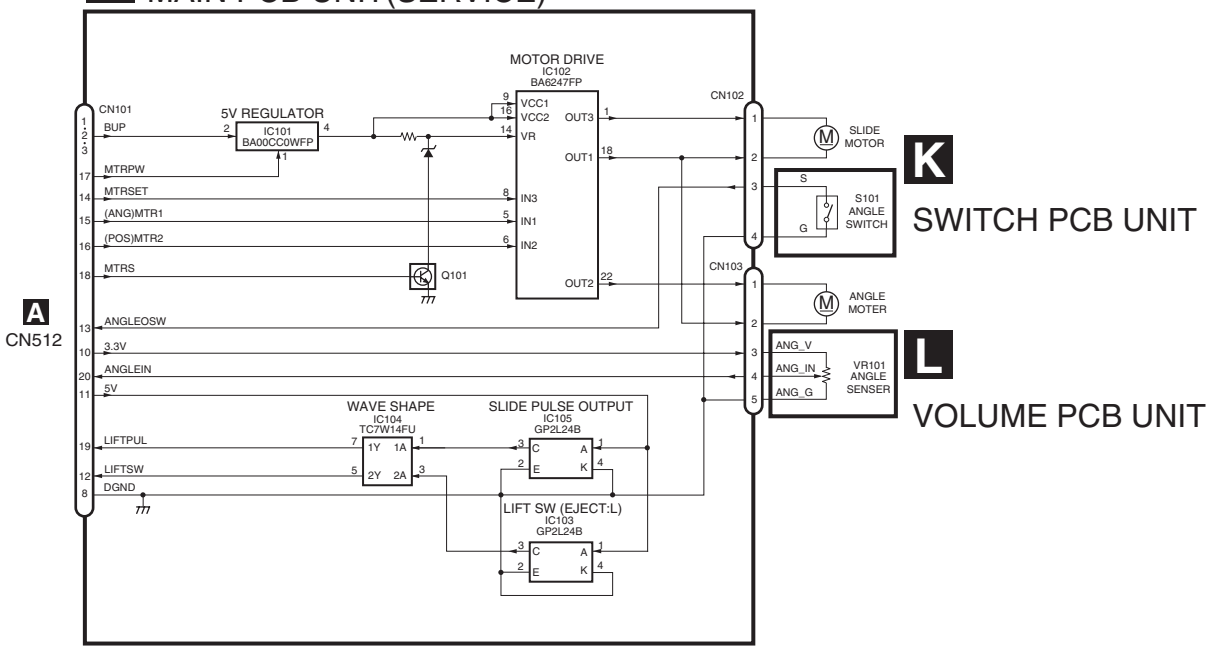

● **CAW1946**

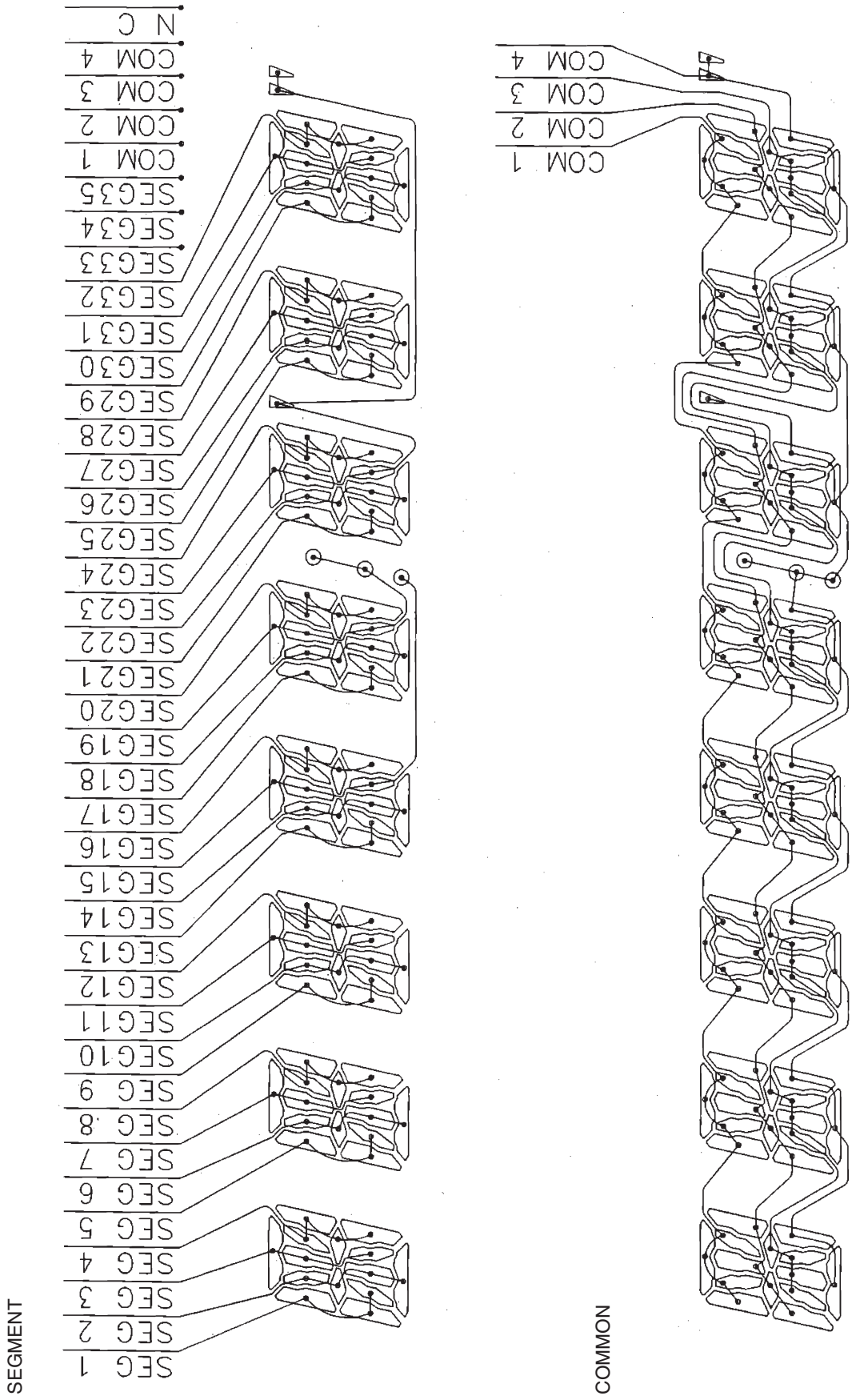
N C
COM 4
COM 3
COM 2
COM 1
SEG35
SEG34
SEG33
SEG32
SEG31
SEG30
SEG29
SEG28
SEG27
SEG26
SEG25
SEG24
SEG23
SEG22
SEG21
SEG20
SEG19
SEG18
SEG17
SEG16
SEG15
SEG14
SEG13
SEG12
SEG11
SEG10
SEG 9
SEG 8
SEG 7
SEG 6
SEG 5
SEG 4
SEG 3
SEG 2
SEG 1
SEGMENT
COM 4
COM 3
COM 2
COM 1
COMMON

5. DIAGNOSIS

5.1 OPERATIONAL FLOW CHART

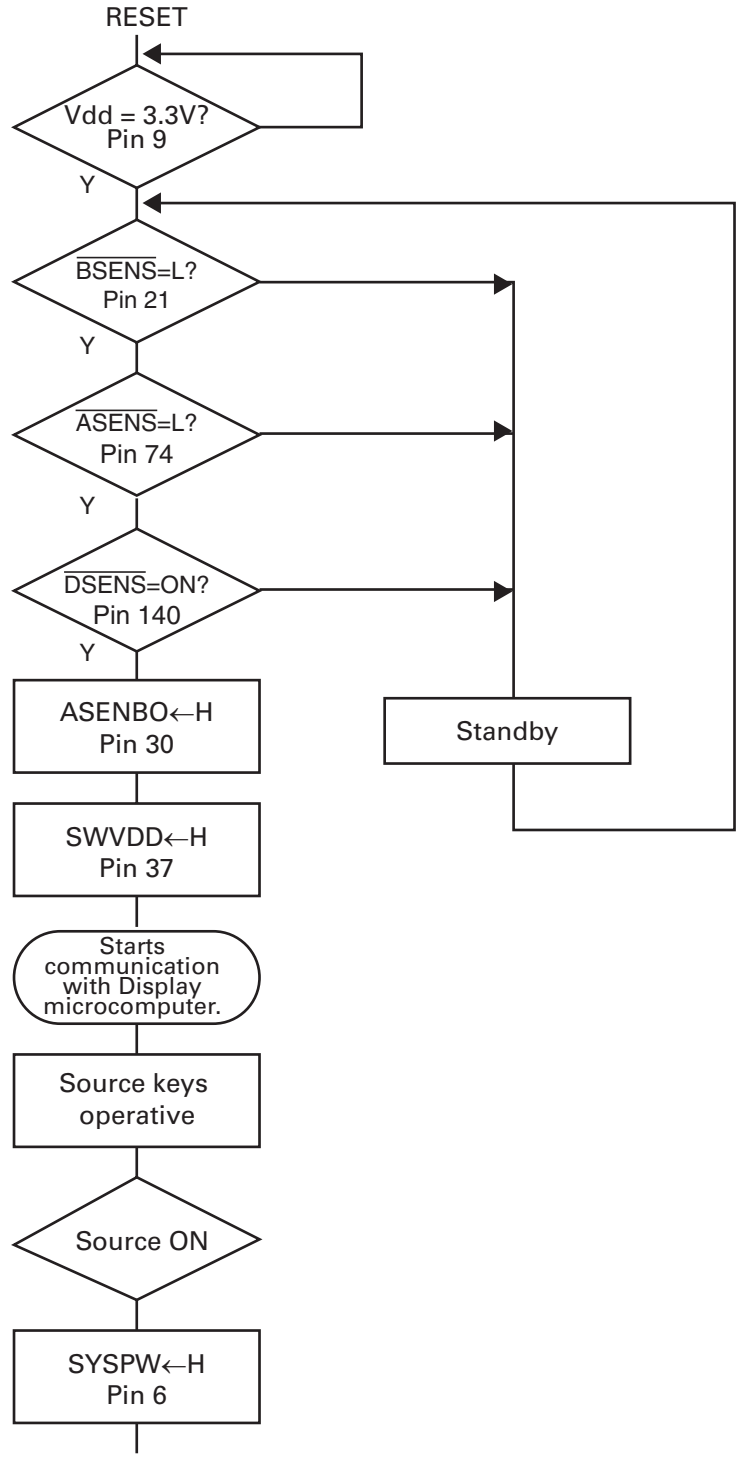

DSENS:
0 [v] to 0.85 [v] = OFF
0.85 [v] to 2.45 [v] = ON
2.45 [v] to 3.3 [v] = OFF

Completes power-on operation.
(After that, proceed to each source operation)

5.2 CONNECTOR FUNCTION DESCRIPTION

1.AVIN-
2.AVIN+
4.VSELIN1
5.VSELIN2
7.AVGND
10.REMIN
11.AVGND

1.PWGND
2.PWPWR
3.TXiPod
4.ACCID
5.L
6.RXiPod
7.VIDEO
8.R
9.DGND
10.ACCPW
11.ACCDIT

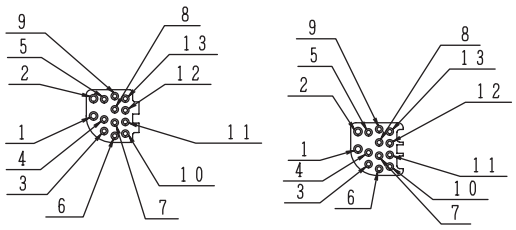

1. MINIV
2. MINIVGND
3. MINIA
4. GND
5. MINIL
6. VGND

ANTENNA CABLE

BGSENS

REAR MONITOR OUTPUT

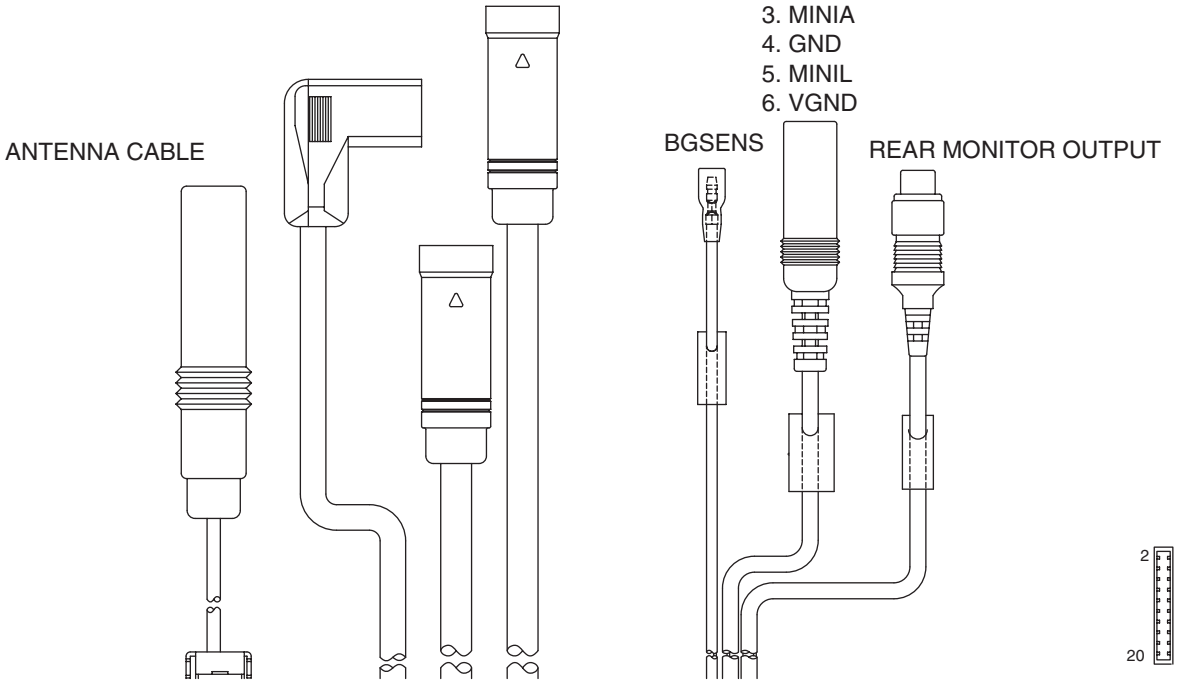

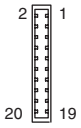

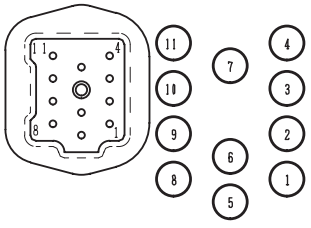

1. BUS+
2. BUSG
3. LG
4. NC
5. BUS-
6. BUSG
7. BUSLI
8. ASENB
9. BUSRI
10. BUSRG
11. BUSLG

1. FL-
2. RL-
3. FL+
4. RL+
5. FR-
6. RR-
7. FR+
8. RR+
9. P.B.
10. VGND
11. ACC
12. B. REM
13. ILM
14. MUTE
15. B. UP
16. GND

1. VCRRG
2. VCRR
3. VCRLG
4. VCRL
5. VCRVG
6. VCRV
7. BCAMG
8. BCAM
9. FRGND
10. FR
11. FLGND
12. FL
13. RRGEN
14. RR
15. RLGND
16. RL
17. SWRGND
18. SWR
19. SMLGND
20. SWL

5.3 BACK END SECTION FLOW

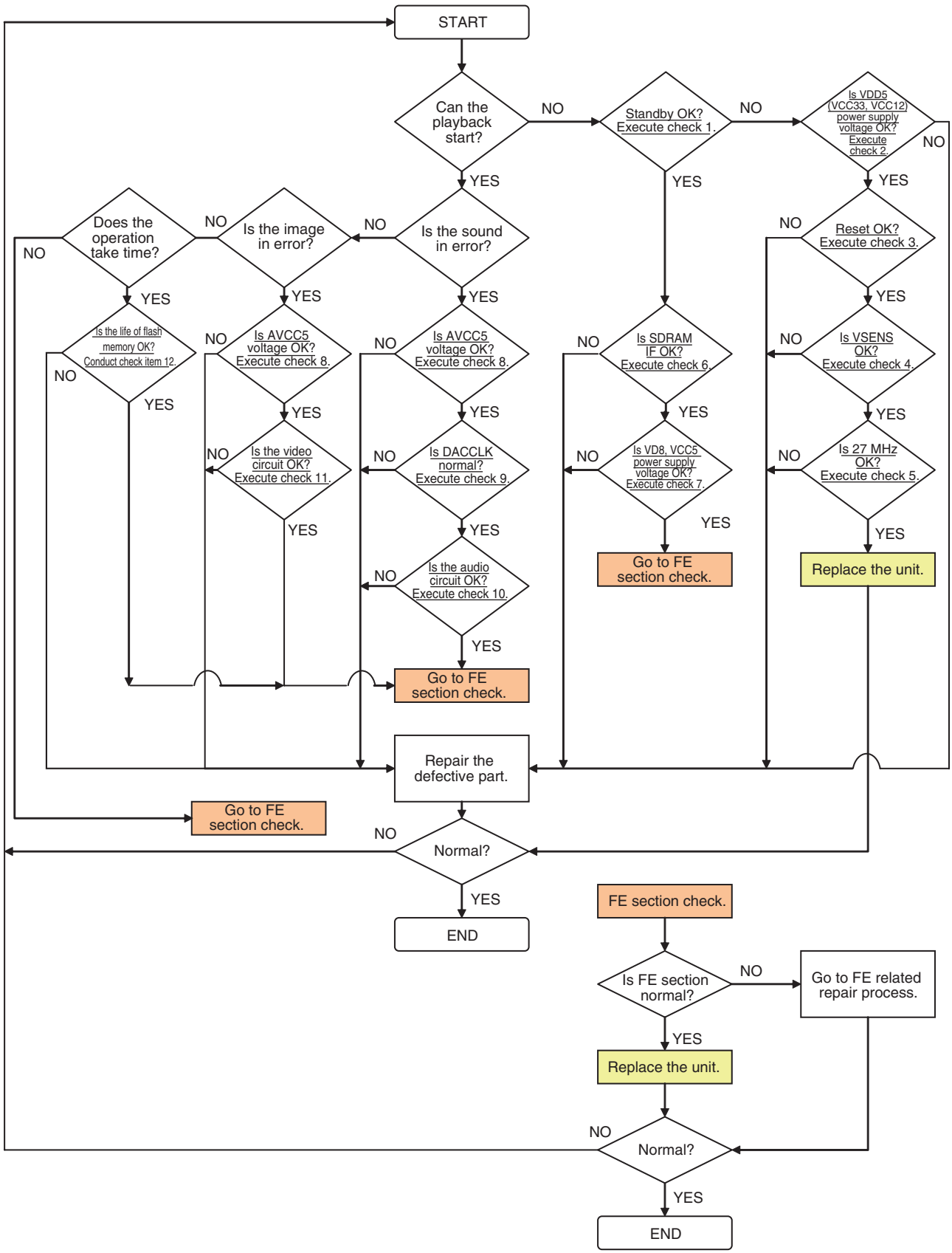

Check 1: Standby OK?

<Check> Check the voltage at the “STANBY” test point while the power is on.
Use the “DGND1” test point at the reference.

NO.	Check point	Module No.	Specification value	Unit
1	STANBY-DGND1	ALL	VCC33 V- 0.6 V or more	V

Side A

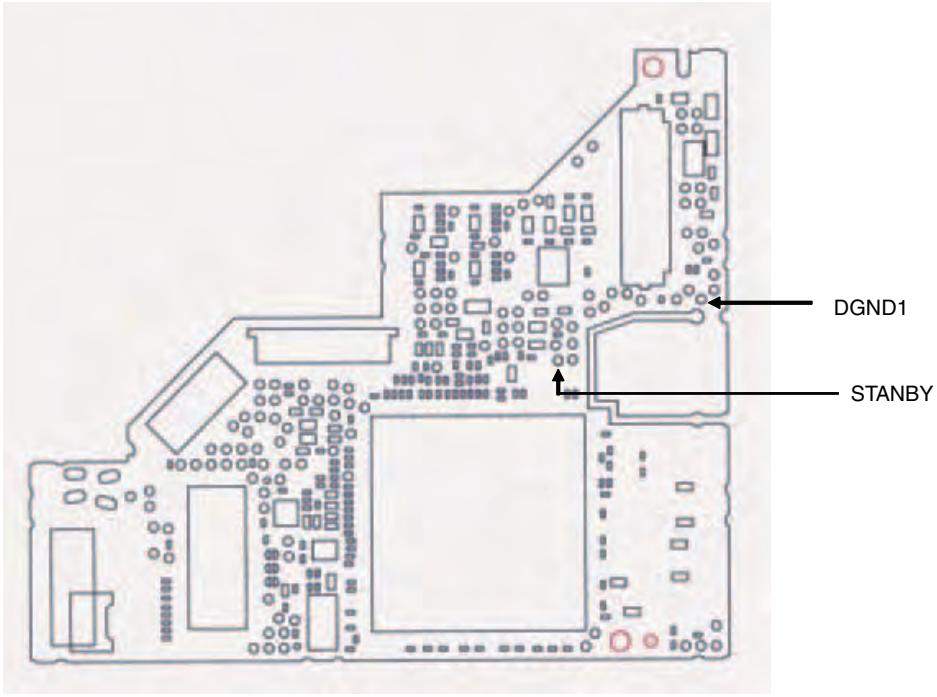

Fig 1.1: STANBY check point

Check 2: Is VDD5 (VCC33, VCC12) power supply voltage OK?

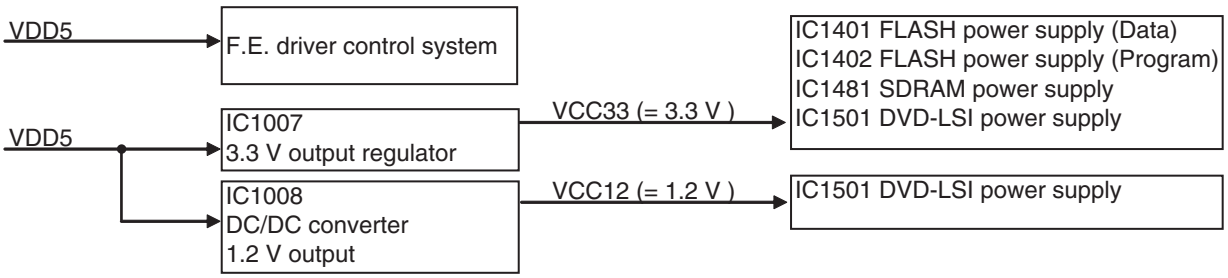

Fig 2.1: Power supply configuration

<Check> Check the voltage at the “VDD5_3, VCC33_3 and VCC12_1” test point while the power is on.
Use the “DGND1” test point at the reference.

NO.	Check point	Module No.	Specification value	Unit
1	VDD5_3 - DGND1	ALL	5.0 ± 0.4	V
2	VCC33_3 - DGND1	ALL	3.3 ± 0.15	V
3	VCC12_1 - DGND1	ALL	1.2 ± 0.12	V

Side A

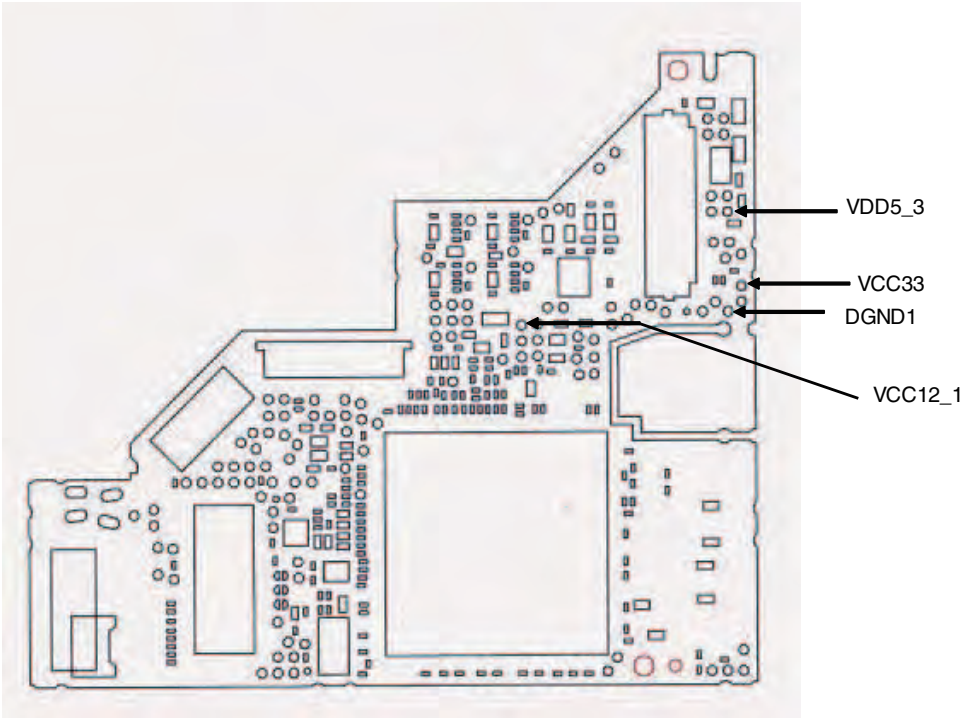

Fig 2.2: VDD5, VCC33, VCC12 voltage check points

Check 3: Reset OK?

<Check> Check the voltage at the “XRES” test point while the power is on.
Use the “DGND1” test point at the reference.

NO.	Check point	Module No.	Specification value	Unit
1	XRES-DGND1	ALL	VCC33 × 0.7 or more	V

Side A

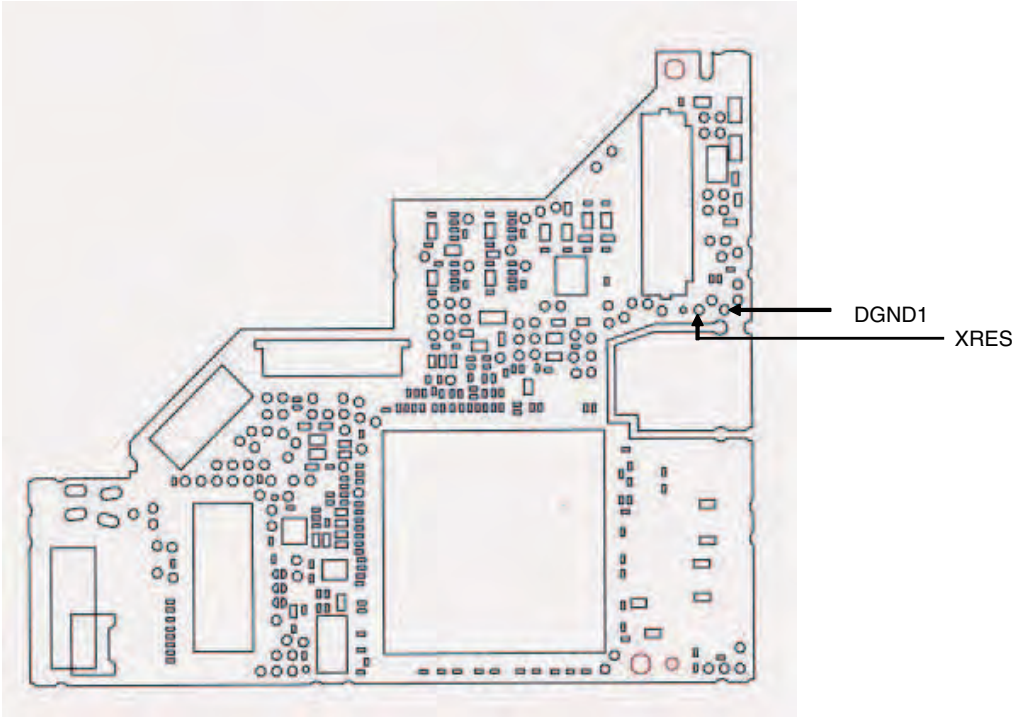

Fig 3.1: RESET check point

Check 4: Is VSENS OK?

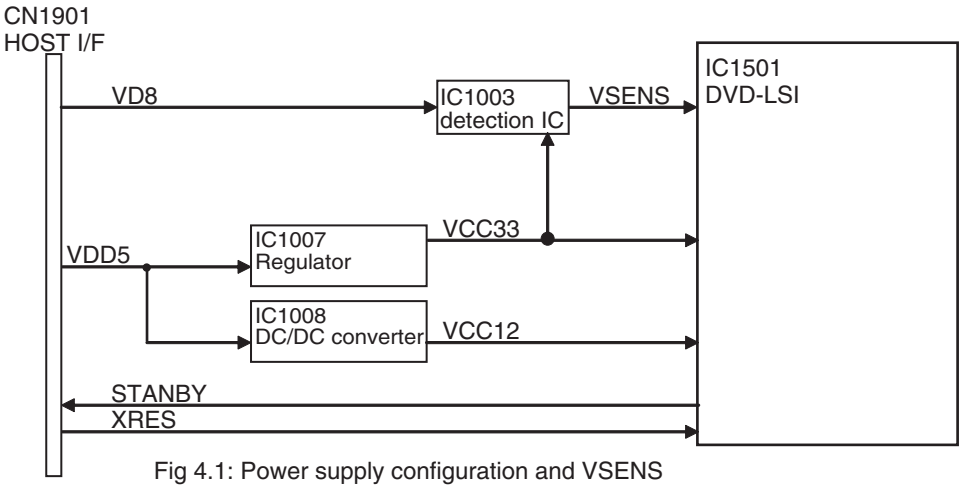

Fig 4.1: Power supply configuration and VSENS

<Check> Check the voltage at the “VSENS” test point while the power is on.
Use the “DGND1” test point at the reference.

NO.	Check point	Module No.	Specification value	Unit
1	VSENS - DGND1	ALL	VCC33 × 0.7 or more	V

Side A

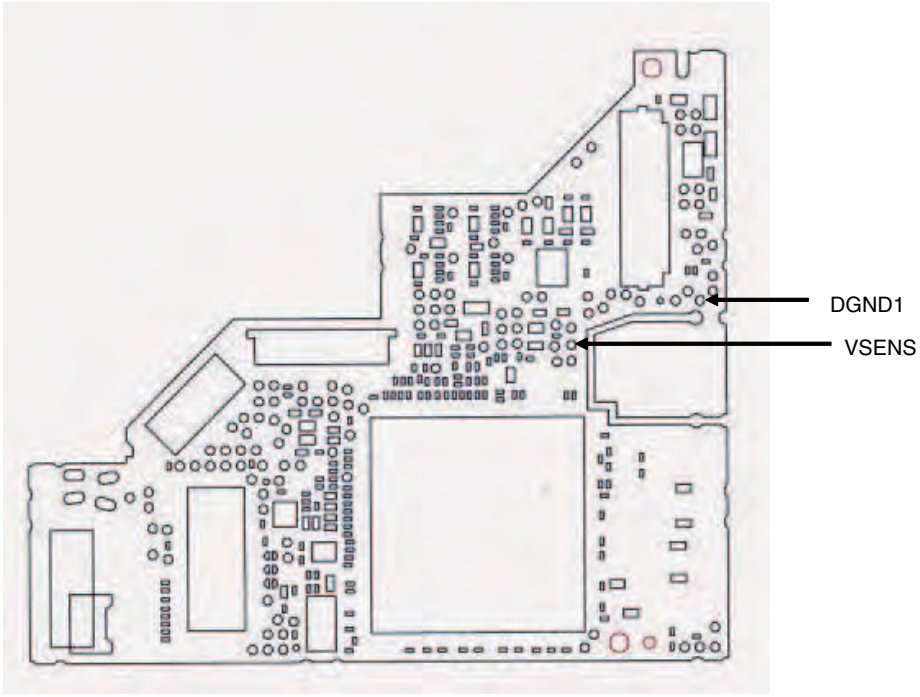

Fig 4.2: VSENS check point

Check 5: 27 MHz Normal?

<Outline> Each clock is created inside the IC1501 using the 27 MHz master crystal oscillator (X1501).

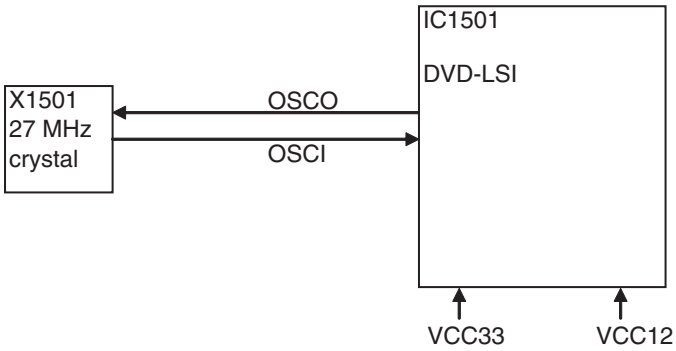

Fig 5.1: Clock configuration

<Check method> Turn the power on, and check with DGND being the reference.
In case of NG, check the applicable line, periphery of IC1501, soldering of the peripheral components and defective components.

NO.	Check point	Module No.	Specification value	Unit
2	IC1501 169pin	ALL	27 MHz ± 50 ppm	ppm

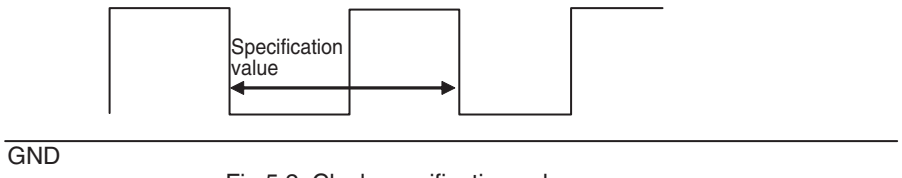

Fig 5.2: Clock specification value

Side A

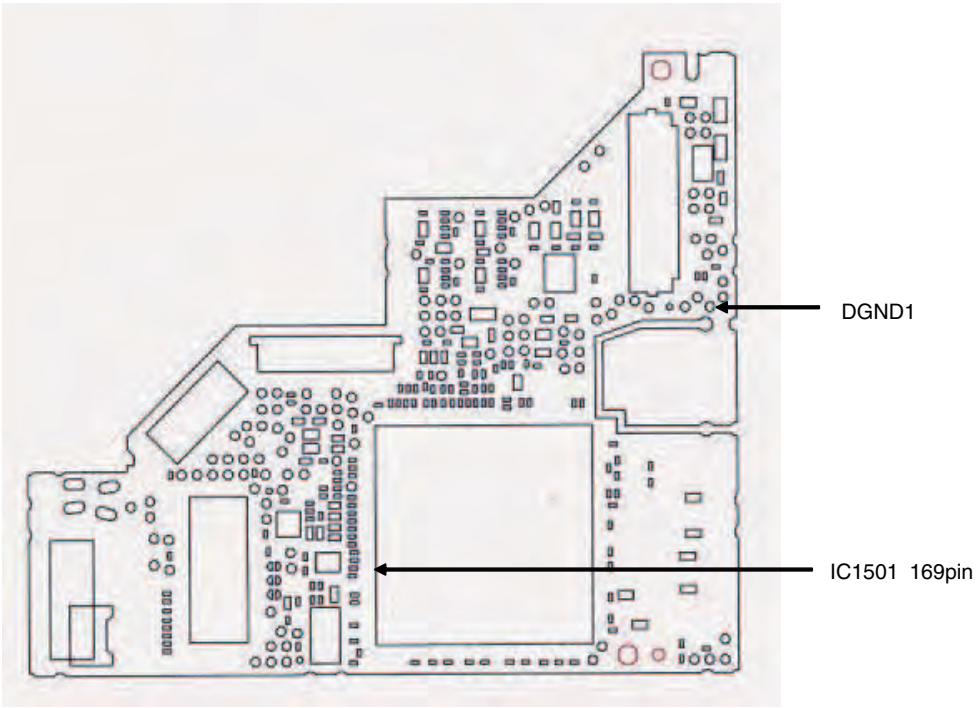

Fig 5.3: 27 MHz check point

Check 6: Is SDRAM I/F OK?

<Outline> In order to secure the MPEG stream data as the buffer,
the capacity of communication I/F SDRAM between the LSI and the memory is 128Mbit.
Be careful as XCSM, XWE, XCAS, XRAS and XSCM of IC1481 are called differently in IC1501,
namely NCSM, NWE, NCAS, NRAS, NCSM.

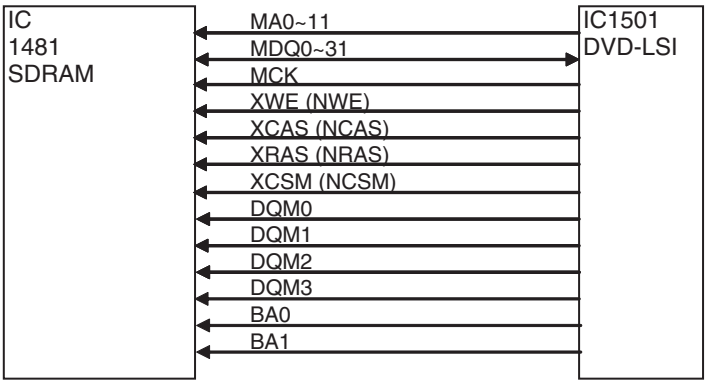

Fig 6.1: SDRAM I/F

<Check> Check the conductivity at “check point 1” and “check point 2” without power.
In case of NG, check the soldering and defective components throughout the “output → input” of the applicable section.

NO.	Signal name	Check point 1		Check point 2		Specification value
1	MA0	IC1481	25pin	IC1501	16pin	56 Ω ± 5 %
2	MA1	IC1481	26pin	IC1501	18pin	56 Ω ± 5 %
3	MA2	IC1481	27pin	IC1501	20pin	56 Ω ± 5 %
4	MA3	IC1481	60pin	IC1501	22pin	56 Ω ± 5 %
5	MA4	IC1481	61pin	IC1501	21pin	56 Ω ± 5 %
6	MA5	IC1481	62pin	IC1501	19pin	56 Ω ± 5 %
7	MA6	IC1481	63pin	IC1501	17pin	56 Ω ± 5 %
8	MA7	IC1481	64pin	IC1501	15pin	56 Ω ± 5 %
9	MA8	IC1481	65pin	IC1501	11pin	56 Ω ± 5 %
10	MA9	IC1481	66pin	IC1501	9pin	56 Ω ± 5 %
11	MA10	IC1481	24pin	IC1501	14pin	56 Ω ± 5 %
12	MA11	IC1481	21pin	IC1501	7pin	56 Ω ± 5 %
13	MDQ0	IC1481	2pin	IC1501	237pin	56 Ω ± 5 %
14	MDQ1	IC1481	4pin	IC1501	239pin	56 Ω ± 5 %
15	MDQ2	IC1481	5pin	IC1501	241pin	56 Ω ± 5 %
16	MDQ3	IC1481	7pin	IC1501	243pin	56 Ω ± 5 %
17	MDQ4	IC1481	8pin	IC1501	248pin	56 Ω ± 5 %
18	MDQ5	IC1481	10pin	IC1501	250pin	56 Ω ± 5 %
19	MDQ6	IC1481	11pin	IC1501	252pin	56 Ω ± 5 %
20	MDQ7	IC1481	13pin	IC1501	254pin	56 Ω ± 5 %
21	MDQ8	IC1481	74pin	IC1501	253pin	56 Ω ± 5 %
22	MDQ9	IC1481	76pin	IC1501	251pin	56 Ω ± 5 %
23	MDQ10	IC1481	77pin	IC1501	249pin	56 Ω ± 5 %
24	MDQ11	IC1481	79pin	IC1501	244pin	56 Ω ± 5 %
25	MDQ12	IC1481	80pin	IC1501	242pin	56 Ω ± 5 %
26	MDQ13	IC1481	82pin	IC1501	240pin	56 Ω ± 5 %
27	MDQ14	IC1481	83pin	IC1501	238pin	56 Ω ± 5 %
28	MDQ15	IC1481	85pin	IC1501	236pin	56 Ω ± 5 %
29	MDQ16	IC1481	31pin	IC1501	29pin	56 Ω ± 5 %
30	MDQ17	IC1481	33pin	IC1501	31pin	56 Ω ± 5 %
31	MDQ18	IC1481	34pin	IC1501	33pin	56 Ω ± 5 %
32	MDQ19	IC1481	36pin	IC1501	37pin	56 Ω ± 5 %
33	MDQ20	IC1481	37pin	IC1501	39pin	56 Ω ± 5 %
34	MDQ21	IC1481	39pin	IC1501	41pin	56 Ω ± 5 %
35	MDQ22	IC1481	40pin	IC1501	43pin	56 Ω ± 5 %
36	MDQ23	IC1481	42pin	IC1501	45pin	56 Ω ± 5 %
37	MDQ24	IC1481	45pin	IC1501	44pin	56 Ω ± 5 %
38	MDQ25	IC1481	47pin	IC1501	42pin	56 Ω ± 5 %
39	MDQ26	IC1481	48pin	IC1501	40pin	56 Ω ± 5 %
40	MDQ27	IC1481	50pin	IC1501	38pin	56 Ω ± 5 %
41	MDQ28	IC1481	51pin	IC1501	34pin	56 Ω ± 5 %
42	MDQ29	IC1481	53pin	IC1501	32pin	56 Ω ± 5 %
43	MDQ30	IC1481	54pin	IC1501	30pin	56 Ω ± 5 %
44	MDQ31	IC1481	56pin	IC1501	28pin	56 Ω ± 5 %
45	MCK	IC1481	68pin	IC1501	234pin	0.17 Ω ± or lower
46	XWE	IC1481	17pin	IC1501	3pin	56 Ω ± 5 %
47	XCAS	IC1481	18pin	IC1501	4pin	56 Ω ± 5 %
48	XRAS	IC1481	19pin	IC1501	5pin	56 Ω ± 5 %
49	XCSM	IC1481	20pin	IC1501	6pin	56 Ω ± 5 %
50	DQM0	IC1481	16pin	IC1501	255pin	56 Ω ± 5 %
51	DQM1	IC1481	71pin	IC1501	256pin	56 Ω ± 5 %
52	DQM2	IC1481	28pin	IC1501	26pin	56 Ω ± 5 %
53	DQM3	IC1481	59pin	IC1501	27pin	56 Ω ± 5 %
54	BA0	IC1481	22pin	IC1501	8pin	56 Ω ± 5 %
55	BA1	IC1481	23pin	IC1501	10pin	56 Ω ± 5 %

Side B

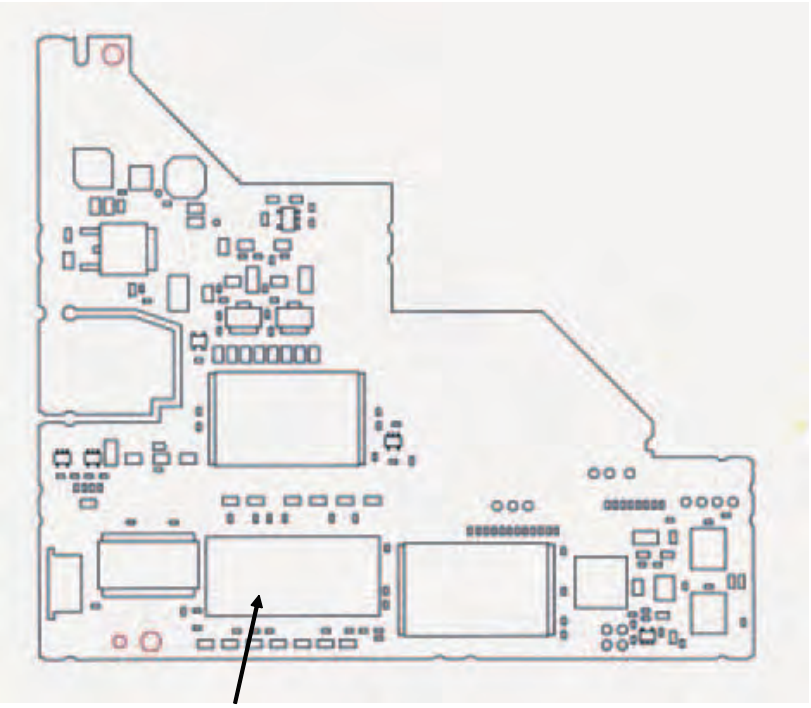

Check point 1 (IC1481)

Side A

Check point 2 (IC1501)

Fig 6.2: SDRAM I/F check point

Check 7: Is VD8, VCC5 power supply voltage OK?

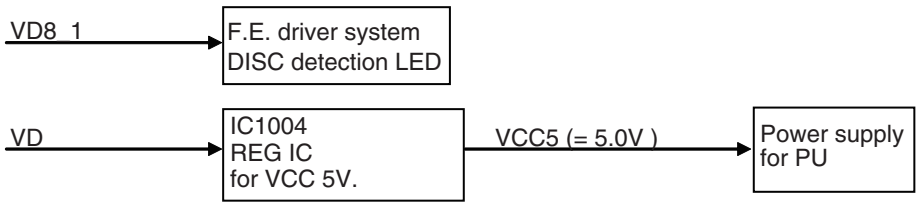

Fig 7.1: Power supply configuration

<Check> Check the voltage at the “VD8_1, VD and VCC5_1” test point while the power is on.
Use the “PGND3 and AGND1” test point at the reference.

NO.	Check point	Module No.	Specification value	Unit
1	VD8_1 - PGND3	ALL	8.0 ± 0.4	V
2	VD - PGND3	ALL	8.0 ± 0.4	V
3	VCC5_1- AGND1	ALL	5.0 ± 0.1	V

Side A

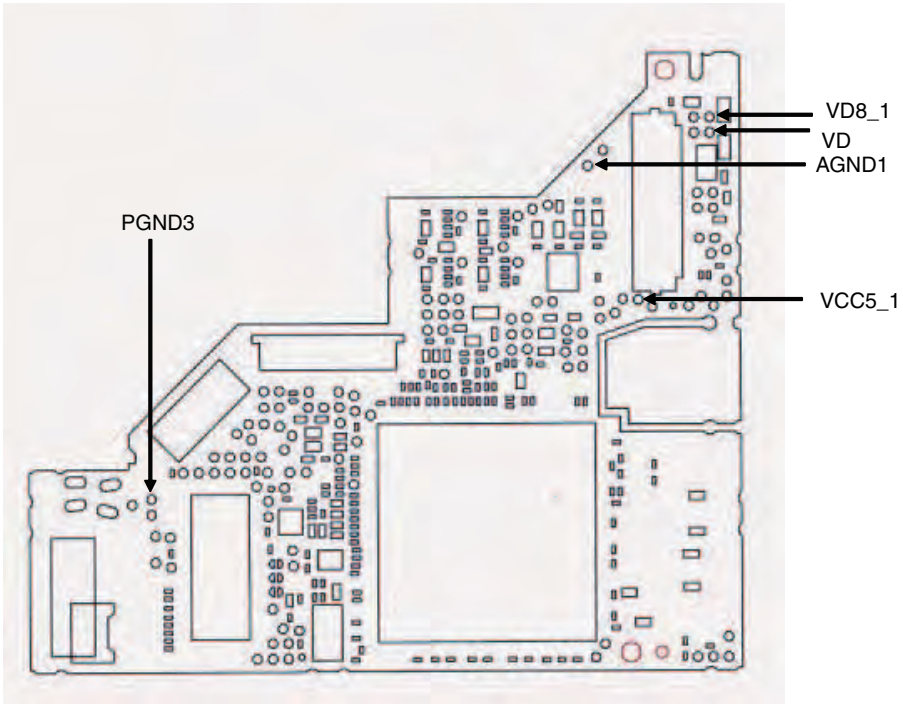

Fig 7.2: VD8, VCC5 voltage check points

Check 8: Is AVCC5 voltage OK?

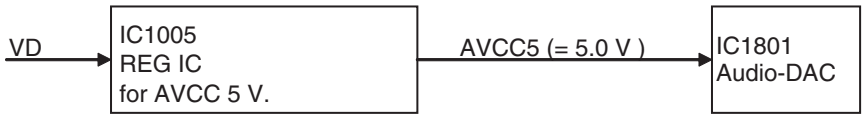

Fig 8.1: Power supply configuration

<Check> Playback DVD-REF-A1 TITLE 1 and check the voltage at the stylus.
Check with PGND and GNDAU being the reference.

NO.	Check point	Module No.	Specification value	Unit
1	VD - PGND_3	ALL	8.0 ± 0.4	V
2	AVCC5 - GNDAU1	ALL	5.0 ± 0.1	V

Side A

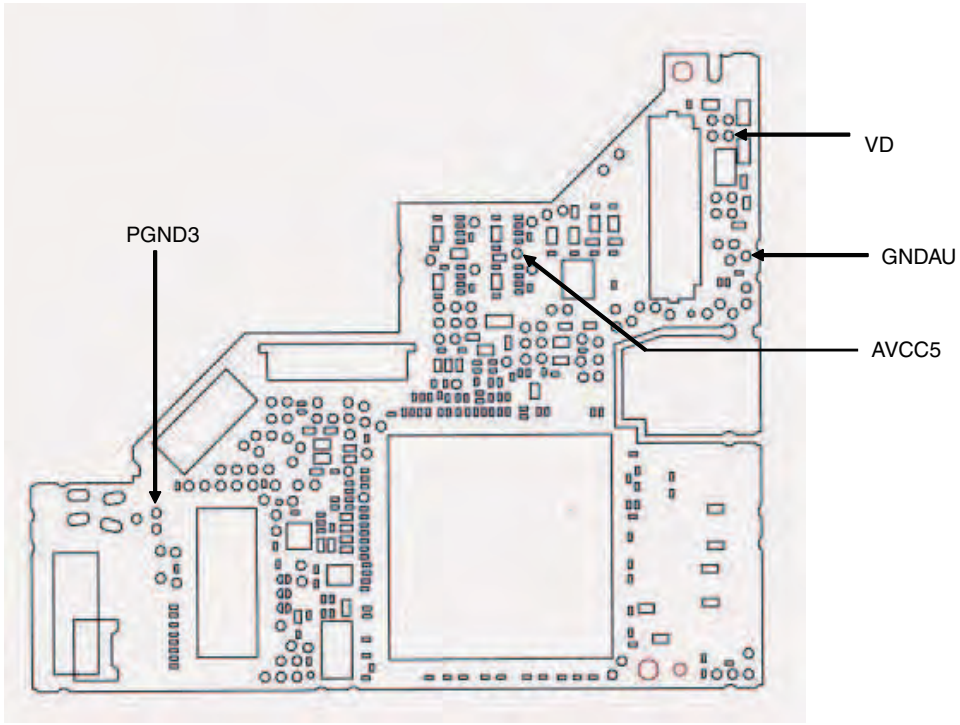

Fig 8.2: VD8, AVCC5 voltage check points

Check 9: Is DACCLK normal?

<Outline> DACCLK for Audio-DAC is created by IC1501 using the 27 MHz master crystal oscillator (X1501).

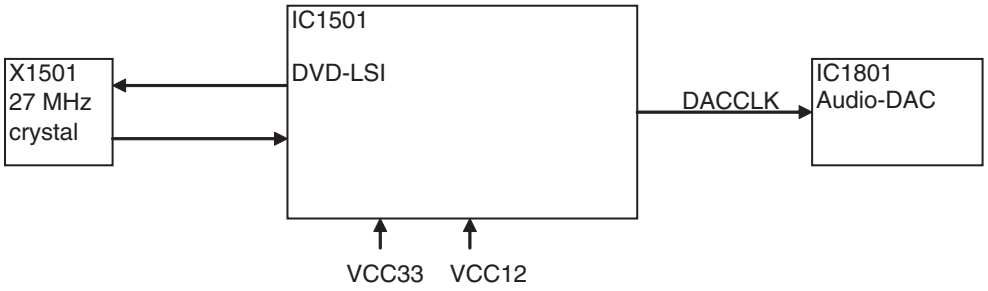

Fig 9.1: Clock configuration

<Check method>
DVD: DVD-REF-A1 TITLE 1
CD: Playback a normal CDDA.
Common to all DVD-V compatible modules.
Check with DGND being the reference.
In case of NG, check the applicable line, the periphery of IC1501, soldering of the peripheral components and defective components.

NO.	Check point 1 (stylus)	Media	Specification value 1	Specification value 2	Specification value 3
1	DACCK	DVD	2.0 V~VCC33 V	DGND~0.8 V	36.8640 MHz±300 ppm
2	DACCK	CD	2.0 V~VCC33 V	DGND~0.8 V	33.8688 MHz±300 ppm

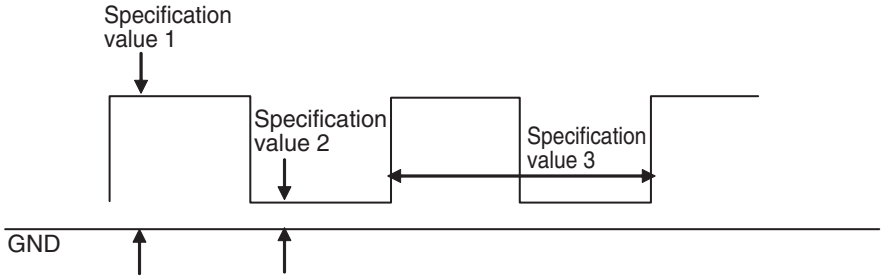

Fig 9.2: Clock specification value

Side A

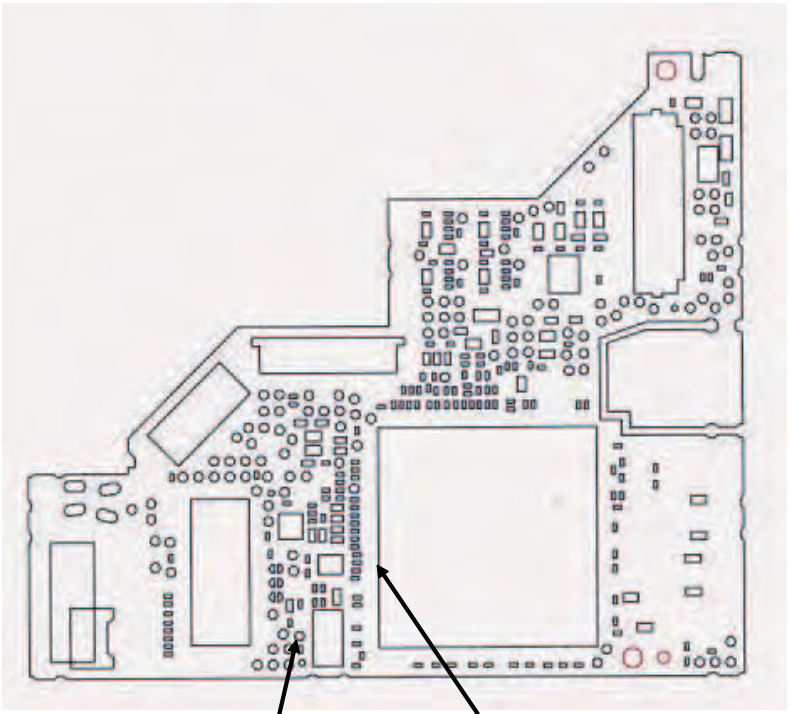

Fig 9.3: 27 MHz, DACCLK check point

Check 10: Is the audio circuit OK?

<Outline> The serial 3 lines digital output + DACCLK, output from DVD-LSI (IC1501), are converted to analog audio signal at Audio-DAC (IC1801) and are output from the HOST I/F (CN1901).
Simultaneously, the analog MUTE signal is also output from DVD-LSI (IC1501) via the HOST I/F.
The digital audio signal (IECOUT), output from DVD-LSI (IC1501), is output via CN1852.

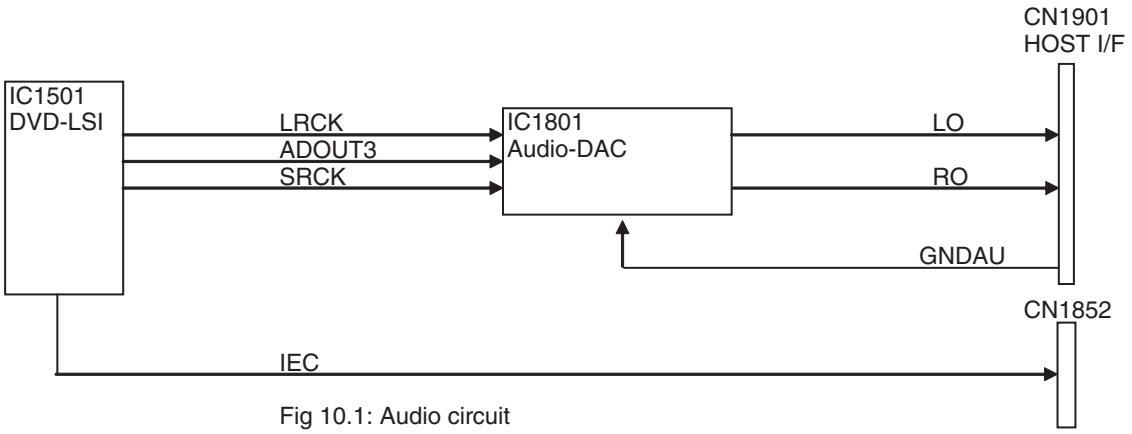

Fig 10.1: Audio circuit

<Check method> Playback DVD-REF-A1 TITLE 2 CHAPTER 1 (48 k/16 bit 1 kHz 0 dB), and check with DGND being the reference.
In case of NG, check the applicable line, periphery of major components as described in the above drawing, soldering of the peripheral components and defective components.

NO.	Check point 1 (stylus)	Specification value 1	Specification value 2	Reference waveform
1	ADOUT3	VCC33 V-0.6 V or higher	0.4 V or lower	Waveform 1
2	SRCK	VCC33 V-0.6 V or higher	0.4 V or lower	Waveform 2
3	LRCK	VCC33 V-0.6 V or higher	0.4 V or lower	Waveform 3

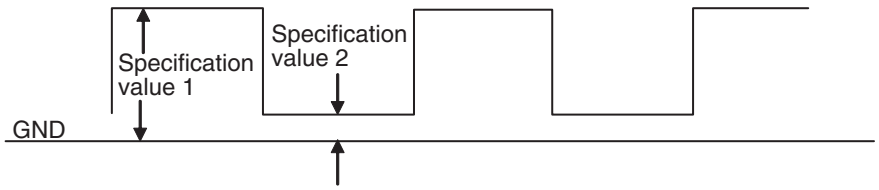

Fig 10.2: Serial 3 lines specification value

Side A

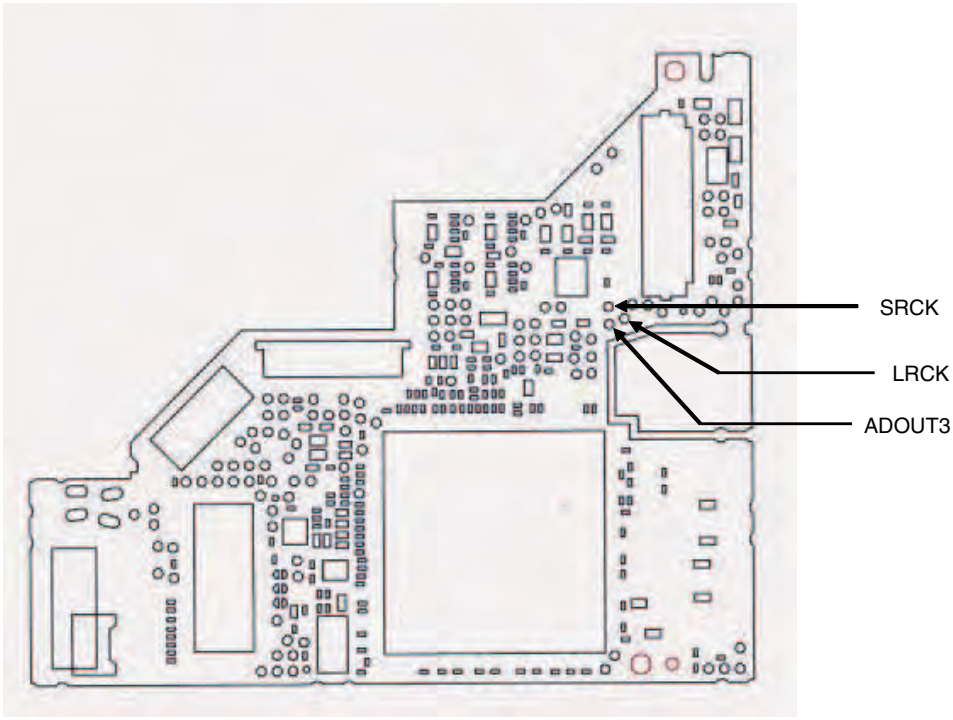

Fig 10.3: Serial 3 lines check points

The following checks shall be conducted using the following measurement circuits with GNDAU1 being the reference.

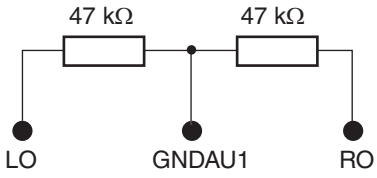

NO.	Check point 1 (stylus)	Specification value (rms)	Reference waveform
4	LO	1 400 ± 150 mV	Waveform 4
5	RO	1 400 ± 150 mV	Waveform 4

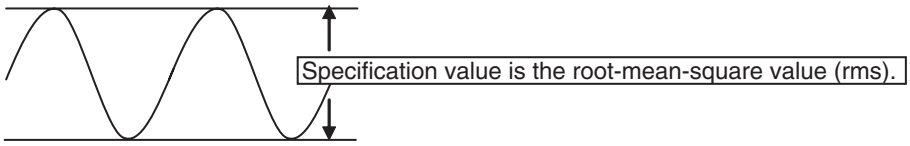

Fig 10.4: Analog audio out (LO, RO) specification value.

Side A

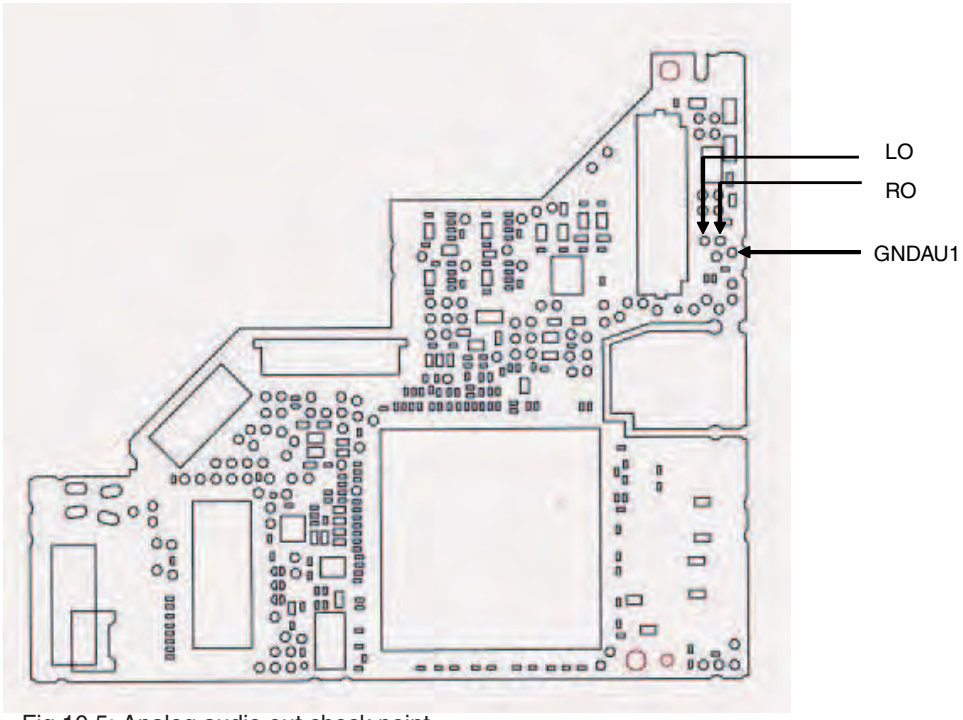

Fig 10.5: Analog audio out check point

Check with DGND being the reference.
Check 2pin cord after connecting it to a jig, etc.

NO.	Check point 1 (stylus)	Specification value 1	Specification value 2	Reference waveform
6	IEC	VCC33 V-0.6 V or higher	0.4 V or lower	Waveform 5

Side A

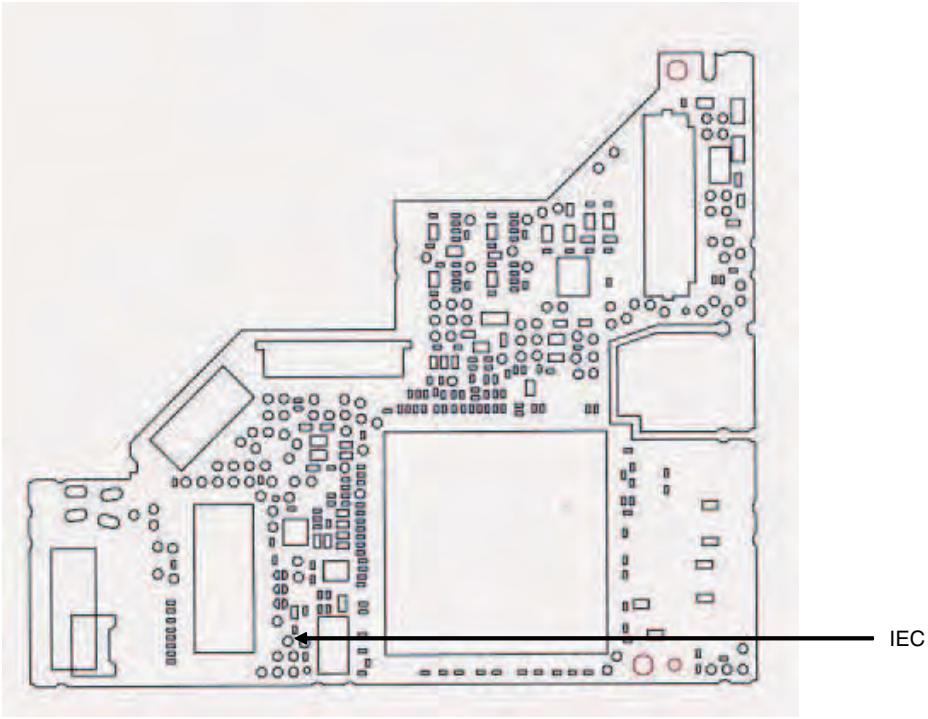

Fig 10.6: Digital audio signal (IECOUT) check point

<Outline> At the time of 6ch digital out, the serial 6 lines output from DVD-LSI (IC1501) is output via CN1581. Furthermore, at the time of ripping, the serial 3 lines digital output + SUBC, output from DVD-LSI (IC1501), is output in 4 times speed via CN1851.

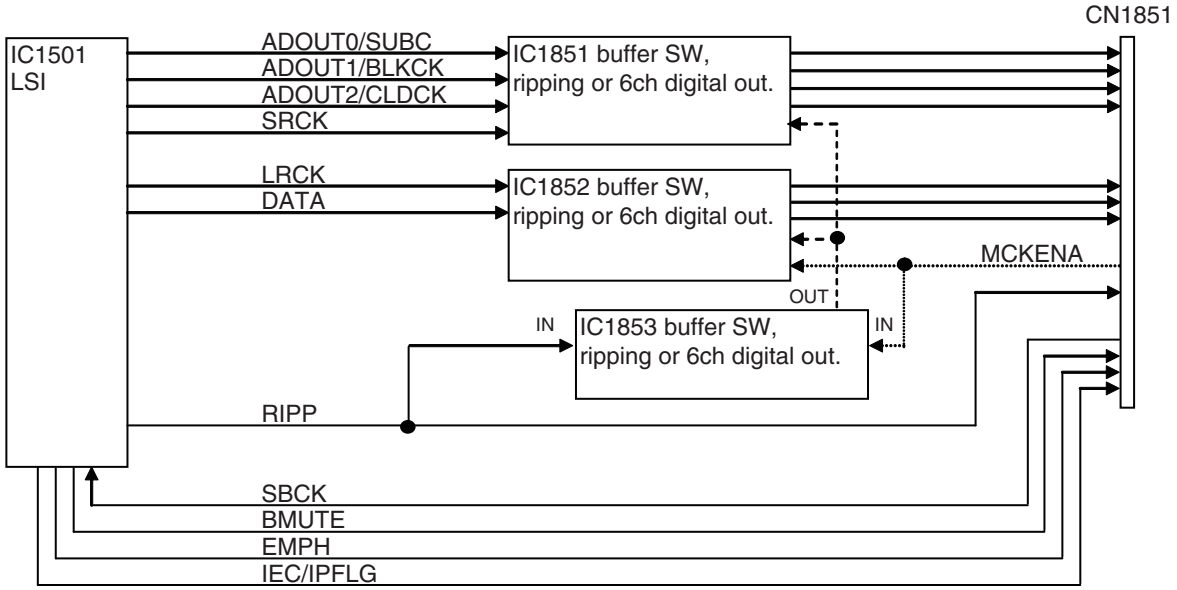

The signal at CN1851 for 6ch digital out/Ripping.

Pin No.	Pin name	6ch digital out	Ripping
23	SRCK	SRCK	SRCK
21	LRCK	LRCK	LRCK
19	AD0/SUBC	ADOUT0	SUBC
17	AD1/BLK	ADOUT1	BLKCK
15	AD2/CLD	ADOUT2	CLDCK
13	AD3/DATA	ADOUT3	DATA
11	IEC/IPFLG	IEC	IPFLG
9	-	-	-
7	SBCK	-	SBCK
5	BMUTE	BMUTE	-
4	MCKENA	Low	High
3	RIPP	High	Low
2	EMPH	EMPH	EMPH
Pins 1, 6, 8, 10, 12, 14, 16, 18, 20, 22 and 24 are GNDD.			

Fig 10.7: 6ch digital out/Ripping circuit

Playback DVD-REF-A1 TITLE22 CHAPTER 1, and check with GNDD being the reference.
In case of NG, check the applicable line, the periphery of the major components in the drawing above, soldering of the peripheral components and defective components.

Check 24pin FFC after connecting it to a jig, etc.

NO.	Check point 1 (stylus)	Specification value 1	Specification value 2
7	SRCK	VCC33 V-0.6 V or higher	0.4 V or lower
8	LRCK	VCC33 V-0.6 V or higher	0.4 V or lower
9	ADOUT0	VCC33 V-0.6 V or higher	0.4 V or lower
10	ADOUT1	VCC33 V-0.6 V or higher	0.4 V or lower
11	ADOUT2	VCC33 V-0.6 V or higher	0.4 V or lower
12	IEC	VCC33 V-0.6 V or higher	0.4 V or lower
13	MCKENA	-	VCC33 V x 0.3 V or lower

Rip common CDDA, and check with GNDD being the reference.
In case of NG, check the applicable line, the periphery of the major components in the drawing above, soldering of the peripheral components and defective components.

Check 24pin FFC after connecting it to a jig, etc.

NO.	Check point 1 (stylus)	Specification value 1	Specification value 2
14	SRCK	VCC33 V-0.6 V or higher	0.4 V or lower
15	LRCK	VCC33 V-0.6 V or higher	0.4 V or lower
16	SUBC	VCC33 V-0.6 V or higher	0.4 V or lower
17	BLKCK	VCC33 V-0.6 V or higher	0.4 V or lower
18	CLDCK	VCC33 V-0.6 V or higher	0.4 V or lower
19	DATA	VCC33 V-0.6 V or higher	0.4 V or lower
20	SBCK	VCC33 V-0.6 V or higher	0.4 V or lower
21	RIPP	-	VCC33 V x 0.3 V or lower

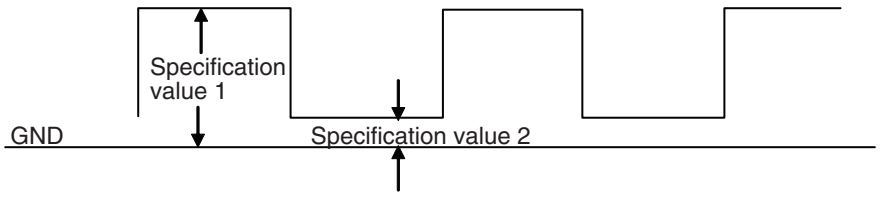

Fig 10.8: 6ch digital out/Ripping specification value

Side A

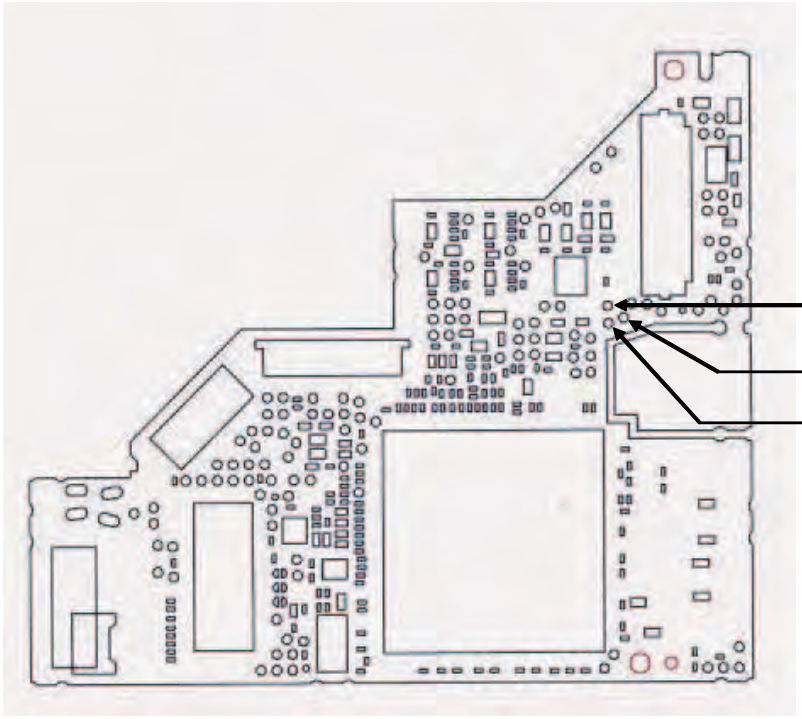

Side B

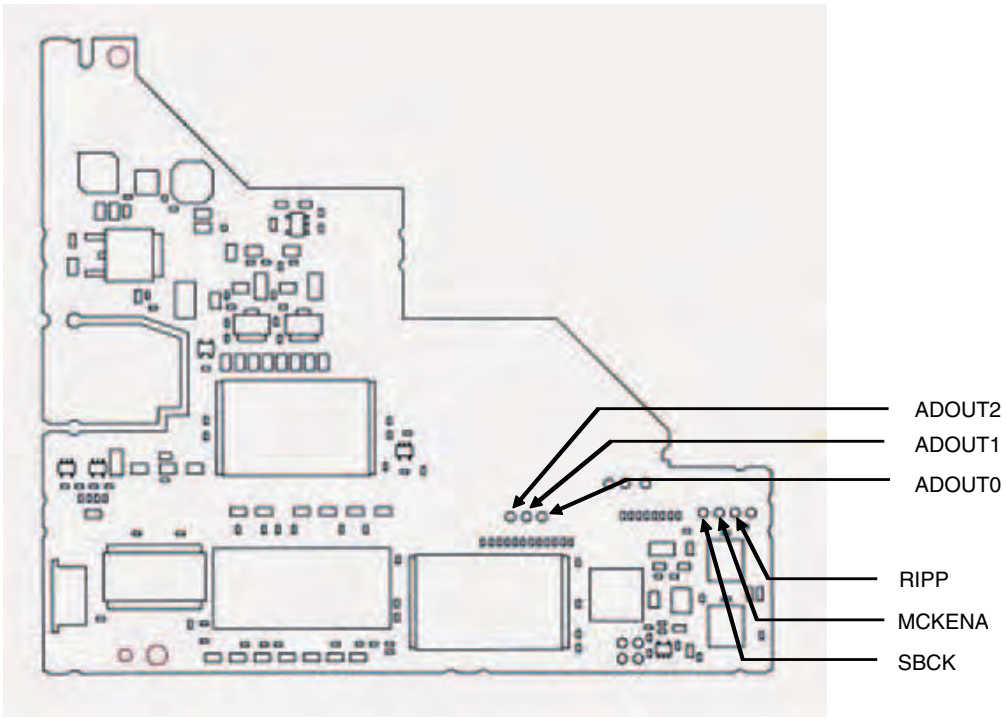

Fig 10.9: 6ch digital out/Ripping check point

Check 11: Is the video circuit OK?

<Outline> Composite signal and component signal are output from DVD-LSI (IC1501), and are output from the HOST I/F (CN1901) via a buffer circuit.

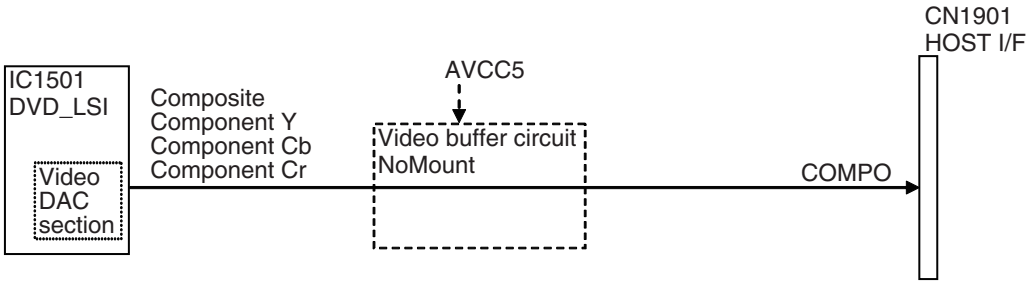

Fig 11.1: Video circuit

<Checking method> Playback DVD-REF-A1 TITLE2 CHAPTER5 (WHITE 100%), and monitor COMPO signal with an oscilloscope with GNDV1 (stylus) being the reference. Set the trigger mode to “TV trigger” and the trigger line to “150 line”.

Check point 1 (stylus)

NO.		Specification value	Reference waveform
1	COMPO	1 000 mVpp ± 5 %	Waveform 6

In case of NG, check the applicable line, the periphery of the major components in the drawing above, soldering of the peripheral components and defective components.

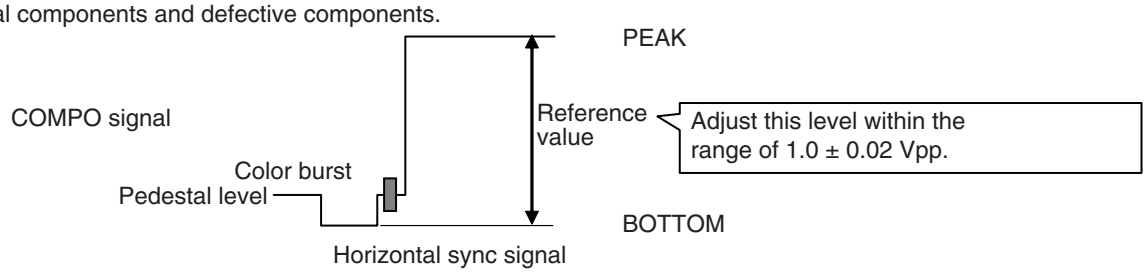

Fig 11.2: Waveform for the case of composite white 100% output

<Video level readjustment method>

In case the video composite output is outside of the specification value, readjust the level according to the method described below.(Note : Units are exchanged, the video output is not adjusted.)

Turn the volume (VR1671) to adjust the video level within the range of 1.0 ± 0.02 Vpp.

The adjustment specification is 1.0 ± 0.02 Vpp.

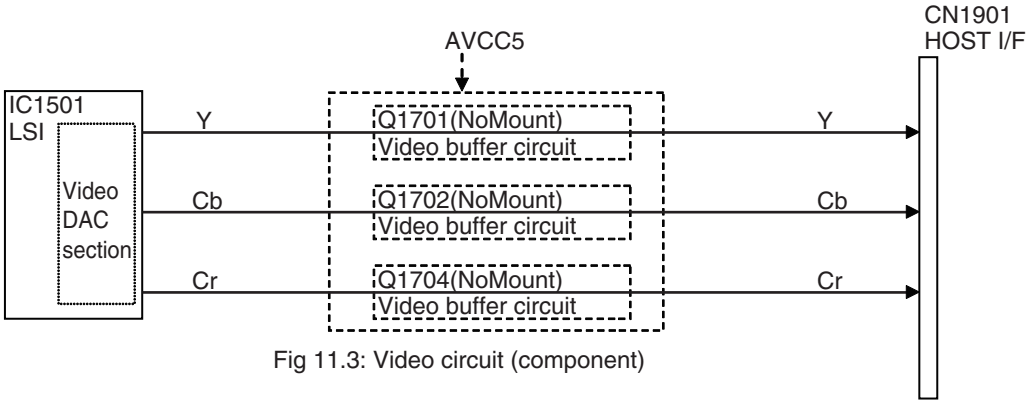

Fig 11.3: Video circuit (component)

<Checking method> Playback DVD-REF-A1 TITLE2 CHAPTER19 (100% Color Bars), and monitor Y, Cb, and Cr signal with an oscilloscope with GNDV1 (stylus) being the reference. Set the trigger mode to "TV trigger" and the trigger line to "150 line".

NO.	Check point 1 (stylus)	Specification value	Reference waveform
2	Y	1 000 mVpp ± 5%	Waveform 7
3	Cb	700 mVpp ± 5%	Waveform 7
4	Cr	700 mVpp ± 5%	Waveform 7

In case of NG, check the applicable line, the periphery of the major components in the drawing above, soldering of the peripheral components and defective components.

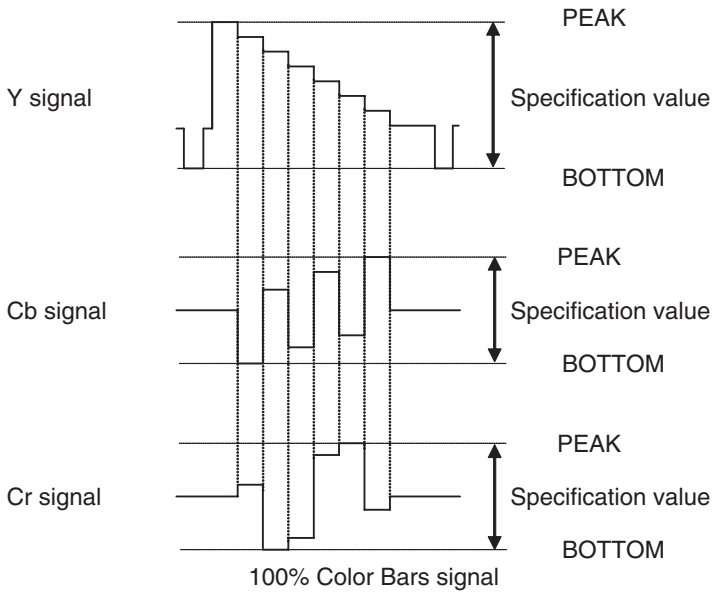

Fig 11.4 Waveform for the case of component 100% Color Bars output

Side A

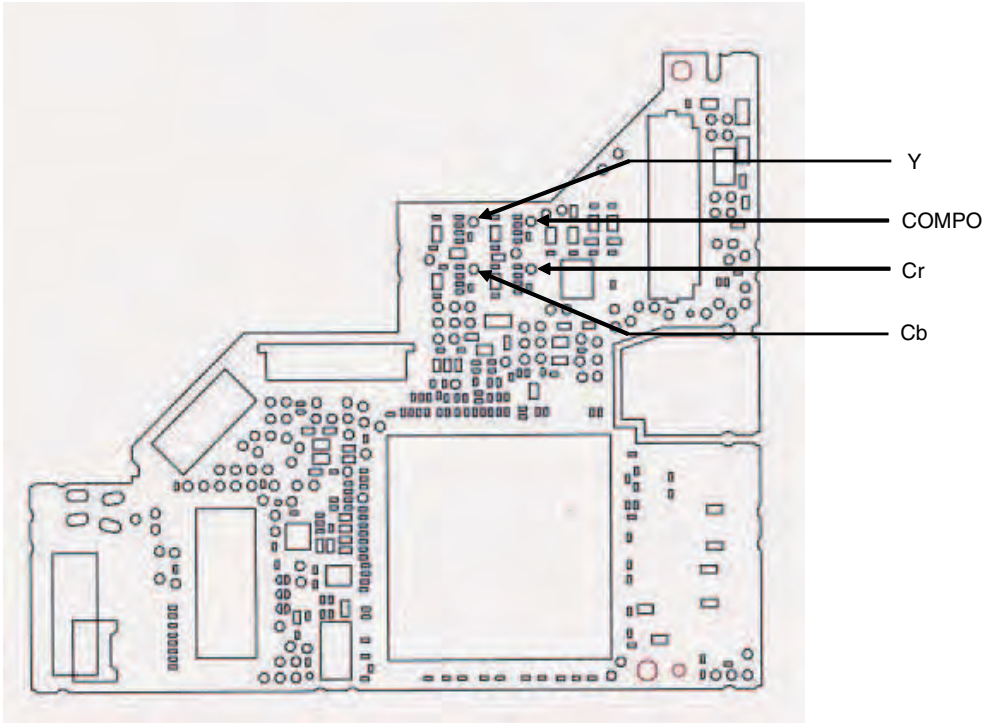

Fig 11.5: VIDEO signal check point

Check 12:How to judge whether the flash memory has reached its life or not.

If the reaction to user operation is slow or operation is slow in general, there is a possibility that the flash memory has reached its life.
Make judgment regarding the flash memory life by looking at the display of the LD energizing time.

1.Let the LD energizing time displayed.
(Refer to the FE test mode for the method of displaying the LD energizing time.)
2.If the second digit from the left of the energizing time display is showing E,
such as " ∗E∗∗ ∗∗∗∗ ", it means that the flash memory has reached its life.

Example:

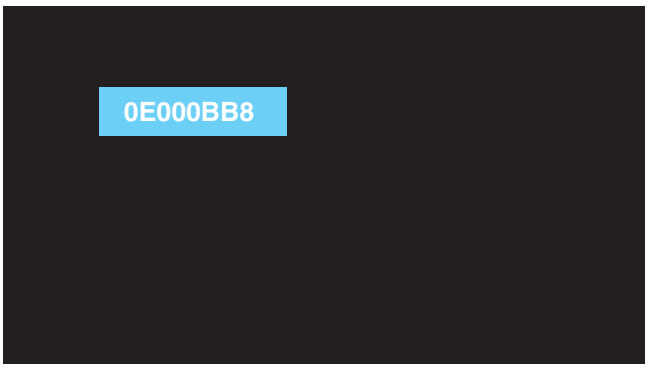

AUDIO VIDEO

CH1 : ADOUT3
Reference voltage: DGND2 1 V/div. 5 µsec/div

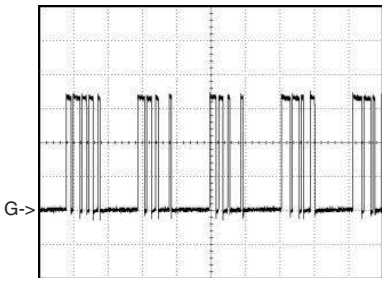

Waveform 1

CH1 : LO
CH2 : RO
Reference voltage: GNDAU2 1 V/div. 500 µsec/div

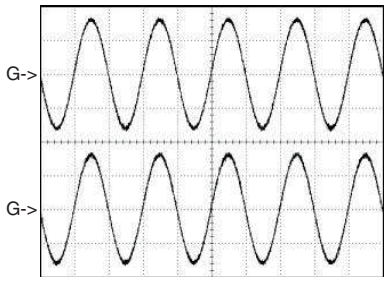

Waveform 4

[100% Color Bars]
CH1 : Y
CH2 : Cb
CH3 : Cr
Reference voltage: GNDV1 200 mV/div. 5 µsec/div

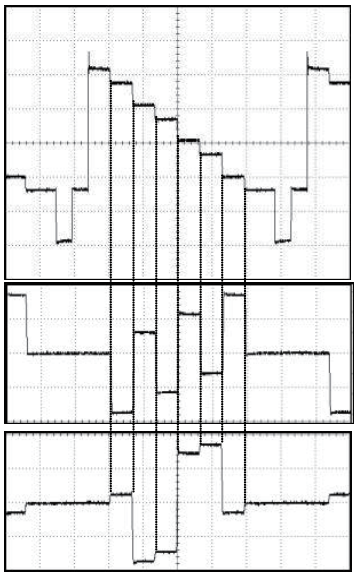

Waveform 7

CH1 : SRCK
Reference voltage: DGND2 1 V/div. 5 µsec/div

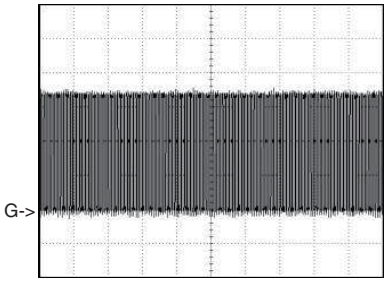

Waveform 2

CH1 : IECOUT
Reference voltage: DGND2 1 V/div. 500 nsec/div

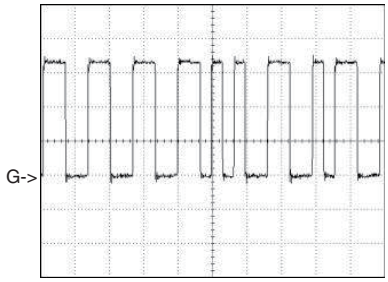

Waveform 5

CH1 : LRCK
Reference voltage: DGND2 1 V/div. 5 µsec/div

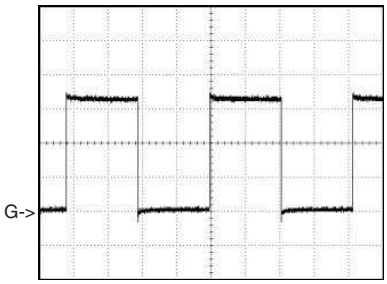

Waveform 3

[WHITE 100IRE]
CH1 : COMPO
Reference voltage: GNDV1 200 mV/div. 10 µsec/div

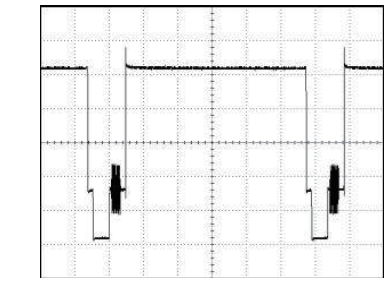

Waveform 6

6. SERVICE MODE
6.1 DVD TEST MODE

Image of the test mode.

The following operations are done by remote control.

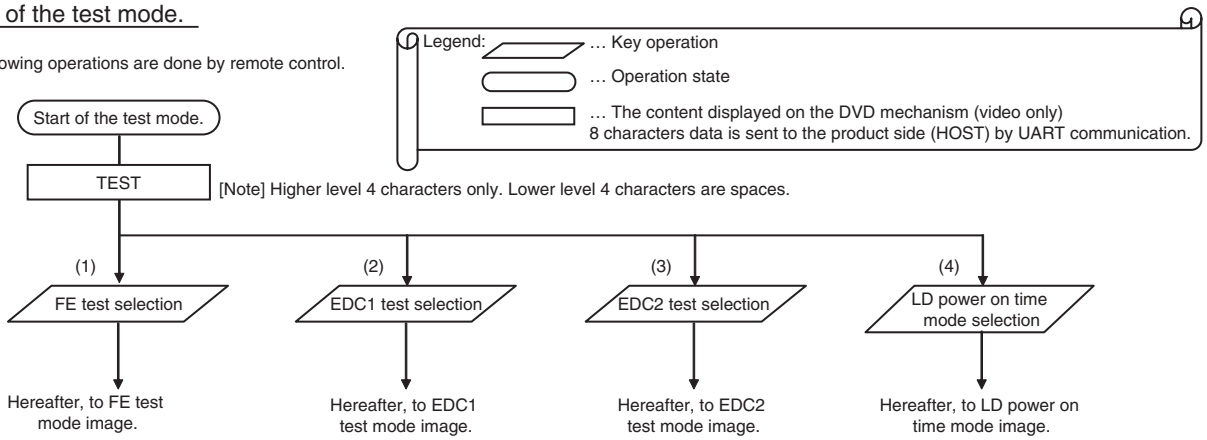

[Note] In order to move on to another test after selecting a test (FE/EDC1/EDC2), it is necessary to restart the DVD mechanism in the test mode.

Image of the front end test mode.

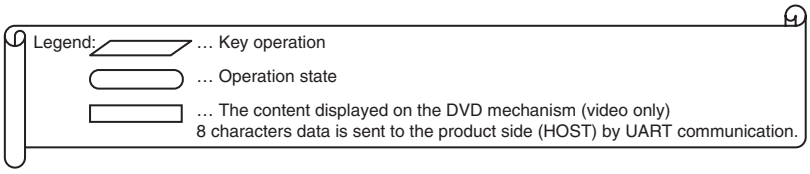

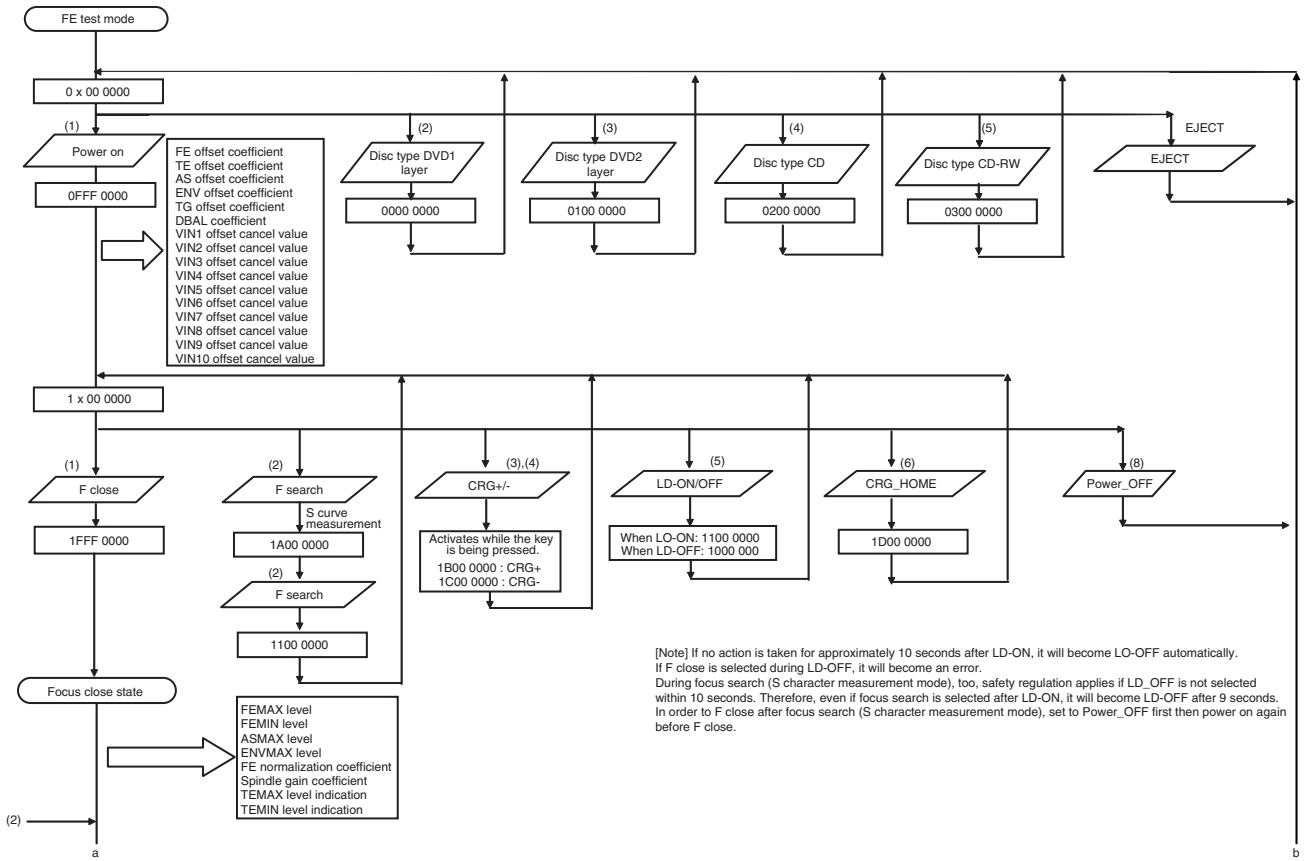

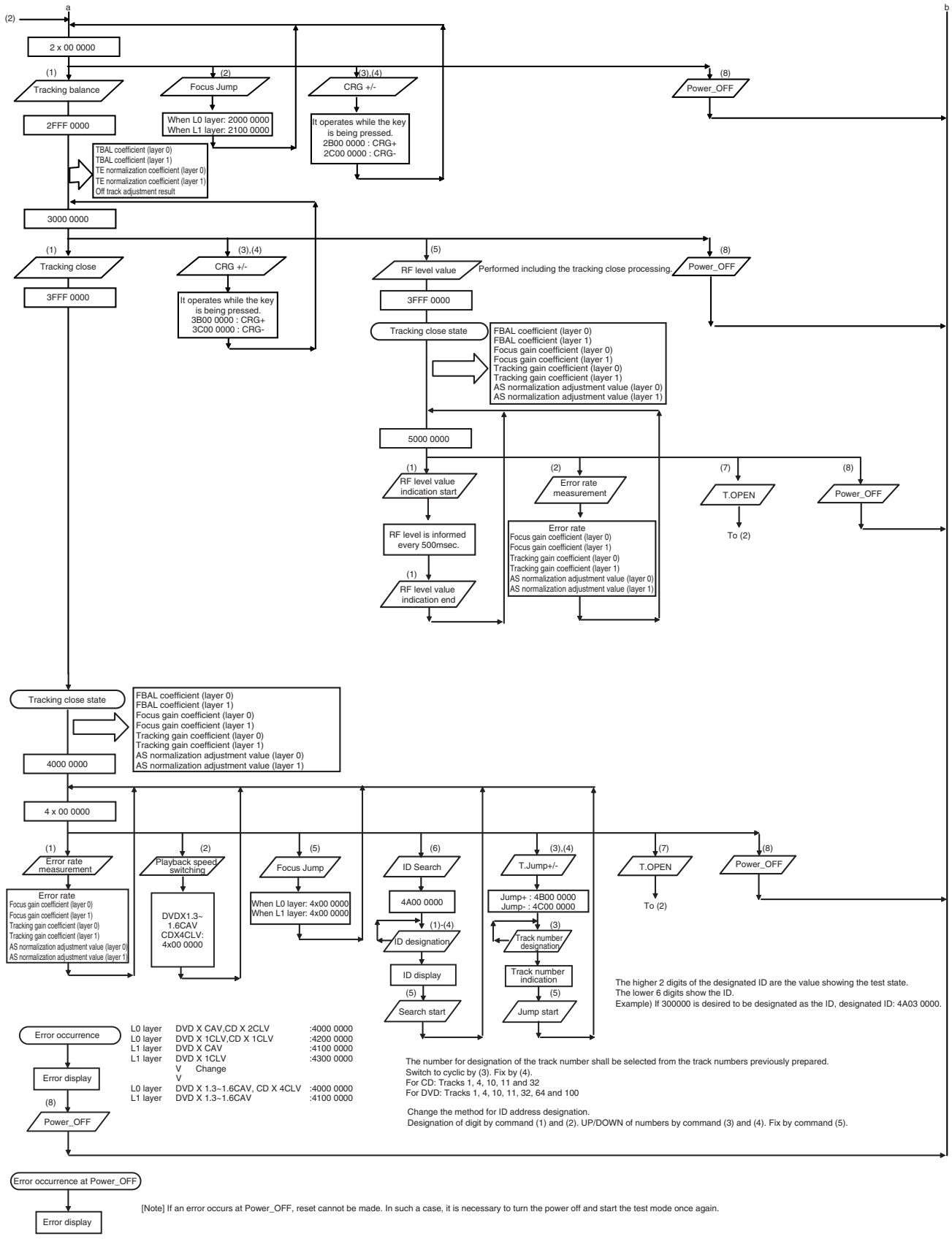
(2)
a
2 x 00 0000
(1)
Tracking balance
2FFF 0000
TBAL coefficient (layer 0)
TBAL coefficient (layer 1)
TE normalization coefficient (layer 0)
TE normalization coefficient (layer 1)
Off track adjustment result
(2)
Focus Jump
When L0 layer: 2000 0000
When L1 layer: 2100 0000
(3),(4)
CRG +/-
It operates while the key is being pressed.
2B00 0000 : CRG+
2C00 0000 : CRG-
(8)
Power_OFF
3000 0000
(1)
Tracking close
3FFF 0000
(3),(4)
CRG +/-
It operates while the key is being pressed.
3B00 0000 : CRG+
3C00 0000 : CRG-
(5)
RF level value
Performed including the tracking close processing.
(8)
Power_OFF
3FFF 0000
Tracking close state
FBAL coefficient (layer 0)
FBAL coefficient (layer 1)
Focus gain coefficient (layer 0)
Focus gain coefficient (layer 1)
Tracking gain coefficient (layer 0)
Tracking gain coefficient (layer 1)
AS normalization adjustment value (layer 0)
AS normalization adjustment value (layer 1)
5000 0000
(1)
RF level value indication start
RF level is informed every 500msec.
(1)
RF level value indication end
(2)
Error rate measurement
Error rate
Focus gain coefficient (layer 0)
Focus gain coefficient (layer 1)
Tracking gain coefficient (layer 0)
Tracking gain coefficient (layer 1)
AS normalization adjustment value (layer 0)
AS normalization adjustment value (layer 1)
(7)
T.OPEN
To (2)
(8)
Power_OFF
Tracking close state
FBAL coefficient (layer 0)
FBAL coefficient (layer 1)
Focus gain coefficient (layer 0)
Focus gain coefficient (layer 1)
Tracking gain coefficient (layer 0)
Tracking gain coefficient (layer 1)
AS normalization adjustment value (layer 0)
AS normalization adjustment value (layer 1)
4000 0000
4 x 00 0000
(1)
Error rate measurement
Error rate
Focus gain coefficient (layer 0)
Focus gain coefficient (layer 1)
Tracking gain coefficient (layer 0)
Tracking gain coefficient (layer 1)
AS normalization adjustment value (layer 0)
AS normalization adjustment value (layer 1)
(2)
Playback speed switching
DVDX1.3~ 1.6CAV
CDX4CLV:
4x00 0000
(5)
Focus Jump
When L0 layer: 4x00 0000
When L1 layer: 4x00 0000
(6)
ID Search
4A00 0000
(1)-(4)
ID designation
ID display
(5)
Search start
(3),(4)
T.Jump+/-
Jump+ : 4B00 0000
Jump- : 4C00 0000
(3)
Track number designation
Track number indication
(5)
Jump start
(7)
T.OPEN
To (2)
(8)
Power_OFF
The higher 2 digits of the designated ID are the value showing the test state.
The lower 6 digits show the ID.
Example) If 300000 is desired to be designated as the ID, designated ID: 4A03 0000.
Error occurrence
Error display
(8)
Power_OFF
L0 layer DVD X CAV,CD X 2CLV :4000 0000
L0 layer DVD X 1CLV,CD X 1CLV :4200 0000
L1 layer DVD X CAV :4100 0000
L1 layer DVD X 1CLV :4300 0000
V Change
V
L0 layer DVD X 1.3~1.6CAV, CD X 4CLV :4000 0000
L1 layer DVD X 1.3~1.6CAV :4100 0000
The number for designation of the track number shall be selected from the track numbers previously prepared.
Switch to cyclic by (3). Fix by (4).
For CD: Tracks 1, 4, 10, 11 and 32
For DVD: Tracks 1, 4, 10, 11, 32, 64 and 100
Change the method for ID address designation.
Designation of digit by command (1) and (2). UP/DOWN of numbers by command (3) and (4). Fix by command (5).
b
Error occurrence at Power_OFF
Error display
[Note] If an error occurs at Power_OFF, reset cannot be made. In such a case, it is necessary to turn the power off and start the test mode once again.

EDC. Image of the test mode

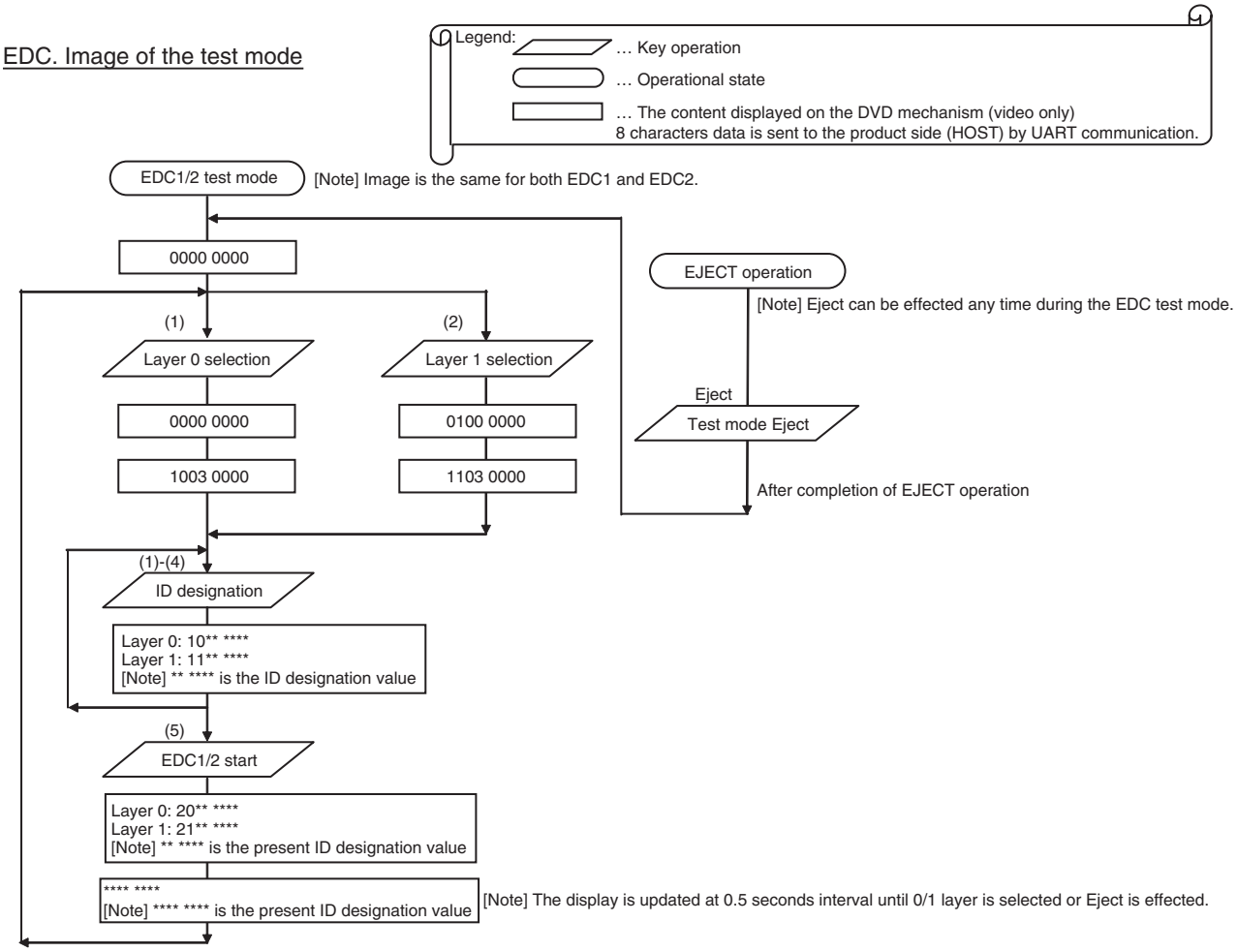

Image of the LD power on time mode.

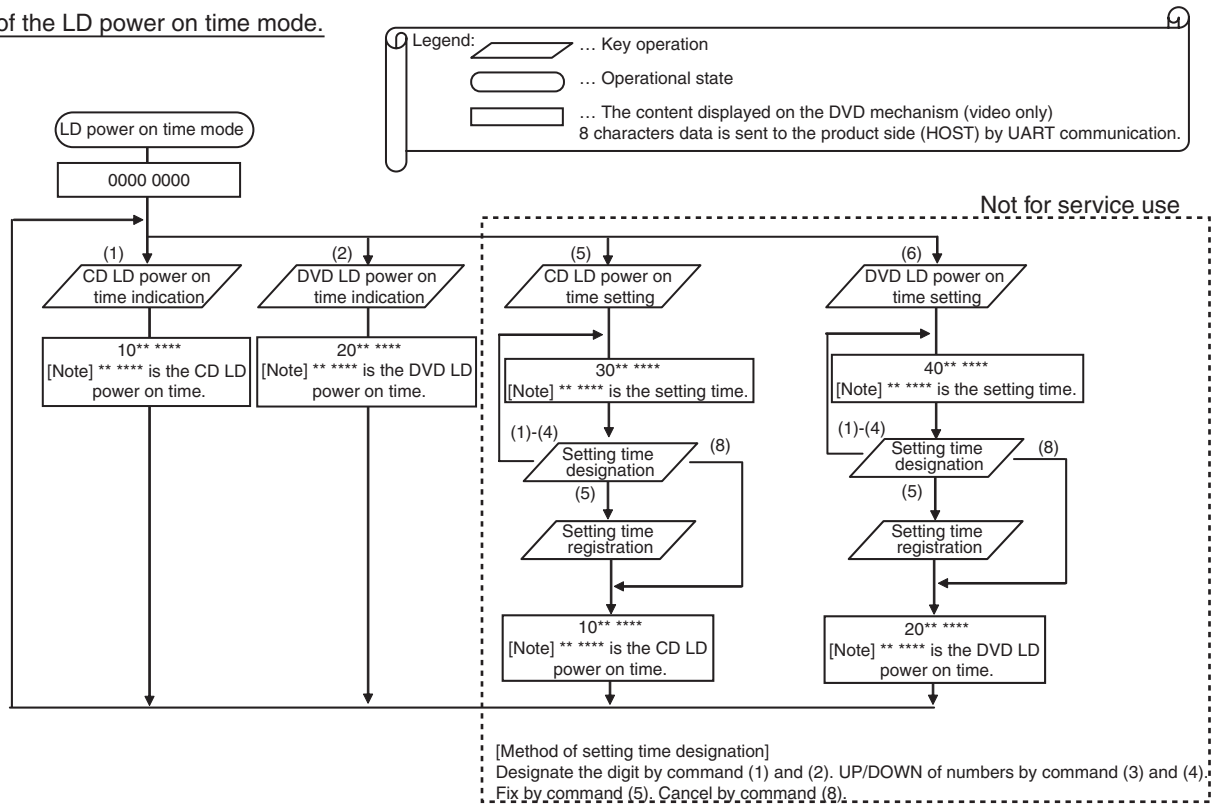

[Note] If the power on time is 999999 hours or more, it is always reported as 999999 hours.
[Note] If the power on time is "*E** ****", the value may not be correct due to the life of the flash memory.

Error status	OSD *1	UART *2	Meaning	Method of reset			
				ACC Off/On	Source Off/On	Eject	Play Key
Media Error	It is a disc unable to be played back. NON-PLAYABLE DISC	00h	A disc containing the unplayable Format only.	X	X	X	-
Open	(No display)	10h	Door open error	*	*	*	*
Read Error	ERROR-02-99	20h	Transfer start error	X	X	X	X
Focus Error(Focus Error in mechanism set up)	ERROR-02-90	21h	Focus error	X	X	X	X
Surface Error	ERROR-02-9E	22h	Focus error during set up (A focus has never been achieved with that disc.)	X	X	X	X
Address not found (Invalid Track)	ERROR-02-80	23h	Address not found.	X	X	X	X
Spindle Lock	ERROR-02-91	24h	Spindle lock NG (the disc cannot rotate)	X	X	X	X
Carriage HOME	ERROR-02-92	25h	Carriage home NG (The pick up tries to return to carriage home, but it cannot go back and stopped.)	X	X	X	X
ID/SUBCODE Read Error	ERROR-02-94	26h	ID/SUBCODE Read Error (ID/SUBCODE cannot be read due to scratch or stain.)	X	X	X	X
AV CHIP decode Error	ERROR-02-9A	2Ah	AV CHIP decode NG (AV chip cannot be decoded.)	X	X	X	X
AV CHIP Recovery NG	ERROR-02-9B	2Bh	AV CHIP recovery NG	X	X	X	X
Error of PLAY BACK Mode Status	ERROR-02-9C	2Ch	Playback state error (An error due to software bug.)	X	X	X	X
Disc Data Error	ERROR-02-9D	2Dh	Disc Data NG	X	X	X	X
Temp Error (In Case of High Temperature)	Temperature protection circuit is being activated. THERMAL PROTECTION IN MOTION	30h	High temperature (Playback is stopped because the pick up temperature is 89 °C or higher.)	X	-	-	-
No Disc (including Disc loading and ejecting)	(No display)	40h	Disc has not been inserted. (Including Load in process or Eject in process.)	*	*	*	*
Loading_Mecha Error	(No display)	50h	Loading mechanism error (The disc cannot be clamped.)	X	-	X	-
DRM Error	It is a protected disc. PROTECTED DISC	70h	DRM error (All music cannot be played back due to DRM.)	-	-	X	-
Region code Error NG	Region code is incorrect. DIFFERENT REGION DISC	90h	Region code NG (Unable to be played back due to incorrect mechanism region.)	-	-	X	-
CPPM*3 Key Error *4	It is a disc unable to be played back. NON-PLAYABLE DISC	91h	Key Error for playback	-	-	X	-
CPRM Key Error *7	NON-PLAYABLE DISC	93h	Key Error for playback	-	-	X	-
AWM*5 Error *4	(No display)	*6	Playback the illegally copied disc by DVD-A (Mute the sound on the mechanism side.)	X	X	X	-
REQUEST error	ERROR-02-A0	A0h	REQUEST error	X	X	X	X
Failure in issuing read command (chip dependent)	ERROR-02-A1	A1h	Failure in issuing the read command	X	X	X	X
Adjustment of L0 is NG.	ERROR-02-A2	A2h	L0 adjustment is NG.	X	X	X	X
Adjustment of L1 is NG.	ERROR-02-A3	A3h	L1 adjustment is NG	X	X	X	X
LD system NG	ERROR-02-A4	A4h	LD system NG	X	X	X	X
Gain adjustment system NG.	ERROR-02-A5	A5h	Gain adjustment system NG.	X	X	X	X
Gain determining system NG.	ERROR-02-A6	A6h	Gain determining system NG.	X	X	X	X
Servo initial setting related items NG.	ERROR-02-A7	A7h	Servo initial setting related items NG.	X	X	X	X
Disc is not clamped yet.	ERROR-02-A8	A8h	Disc is not clamped yet.	X	X	X	X
Tracking system NG.	ERROR-02-A9	A9h	Tracking system NG	X	X	X	X
Media setting system NG.	ERROR-02-AA	AAh	Media setting system NG	X	X	X	X
Focus Error	ERROR-02-AB	ABh	JUMP over layers NG	X	X	X	X
Error of PLAY BACK Mode Status	ERROR-02-B0	B0h	Navigation command error	X	X	X	X
Error of PLAY BACK Mode Status	ERROR-02-B1	B1h	Retry over	X	X	X	X
Undefined Error	ERROR-FF-FF	FFh	Undefined error	X	X	X	X

X: Cancel the error by operation. -: Error is not cancelled by operation. *: No setting
*1 A content displayed on OSD. As for the items having multiple display patterns, the upper row is for the Japanese version Full GUI, and the lower row is for the Touch Panel model and Full GUI (English version).
*2 A parameter of UART command, such as “receipt error notice”, that the DVD mechanism transmits.
*3 CPPM(Content Protection for Prerecorded Media) : A copyright protection technique used in DVD-A. The protection is realized by using the keys recorded on the media and the device key held by the player.
*4 DVD-A compatible model only.
When an error has occurred, only the audio output will be muted but playback operation will continue. Furthermore, acceptance of the user operation will be the same as usual.
*5 AWM (Audio WaterMark): Electronic watermark. Information on the copyright owner or CCI (copy control information) are recorded so that illegally copied discs can be identified.
*6 Notice as an error status will not be given
*7 CPRM(Content Protection for Recordable Media) : A copyright protection technique for digital contents used for re-writable DVD or memory card. (DVD-VR model only)

7. DISASSEMBLY

● Removing the Grille Assy and the Panel Unit (Fig.1)

1. Push the [Detach] Button and then remove the Grille Assy.
2. Remove the two screws and then remove the Holder.
3. Disconnect the connector.
4. Remove the two screws and then remove the Panel Unit.

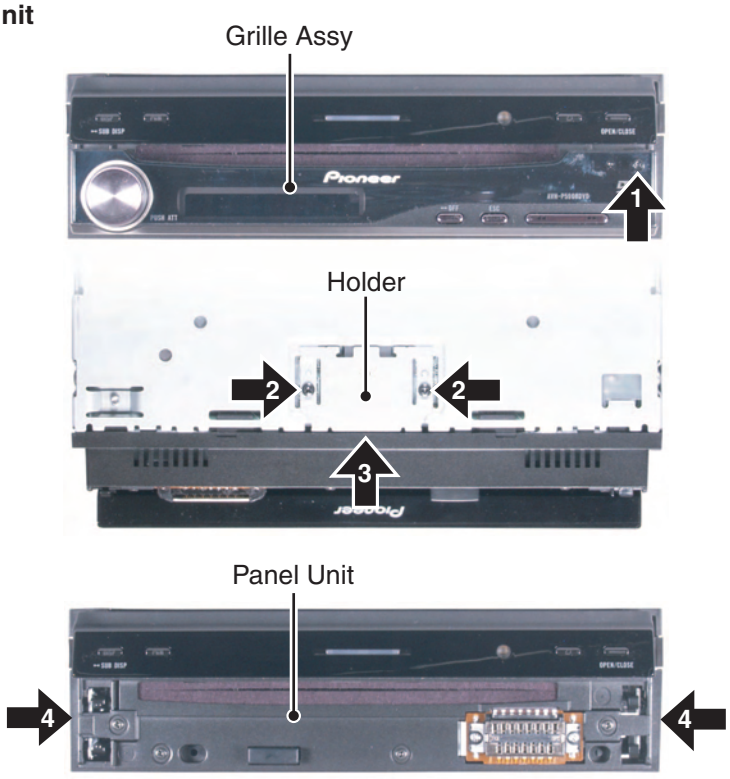

Fig.1

●How to Separate the Upper Case and the Lower Case (Fig. 2)

1. Remove the seven screws.
2. Open the Upper Case and the Lower Case in the direction indicated by arrows.

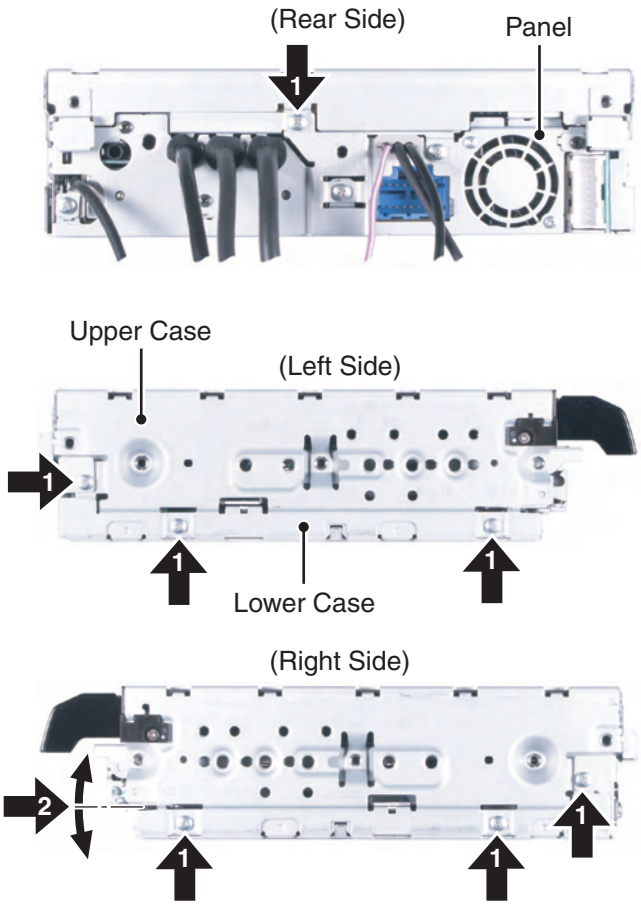

Fig.2

● Removing the DVD Mechanism Module (Fig.3)

1 Remove the four screws and then bring down the Bracket toward the Upper Case. See Fig.3 (2/2).

2 Remove the four screws and then bring down the DVD Mechanism Module toward the Upper Case. See Fig.3 (2/2).

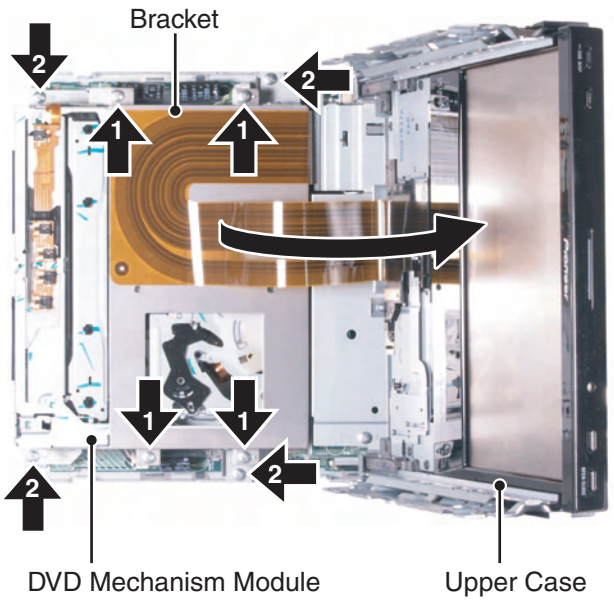

Fig.3 (1/2)

3 Disconnect the three connectors.

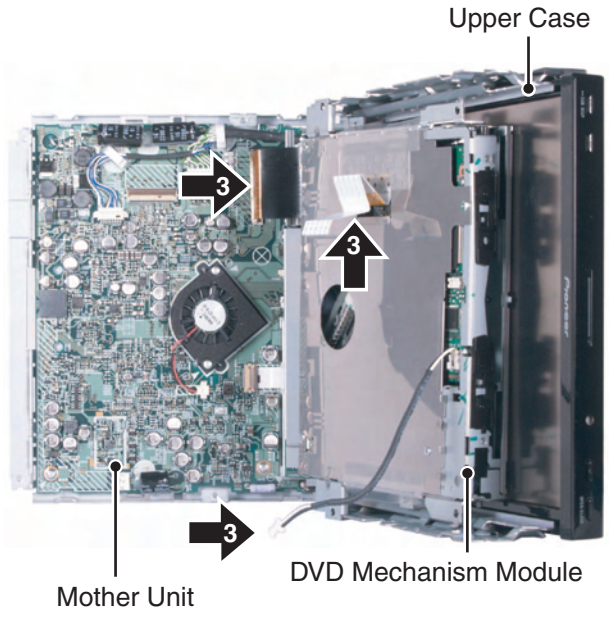

Fig.3 (2/2)

● Removing the Holder and the Panel (Fig.4)

1. Remove the three screws.
2. Remove the three screws.
3. Remove the two screws and then remove the Panel.
4. Remove the screw.
5. Straighten the tabs at two locations indicated and then remove the Holder.

[Caution]
The Panel cannot be removed in 3 unless the Holder is removed in advance in 4 and 5.

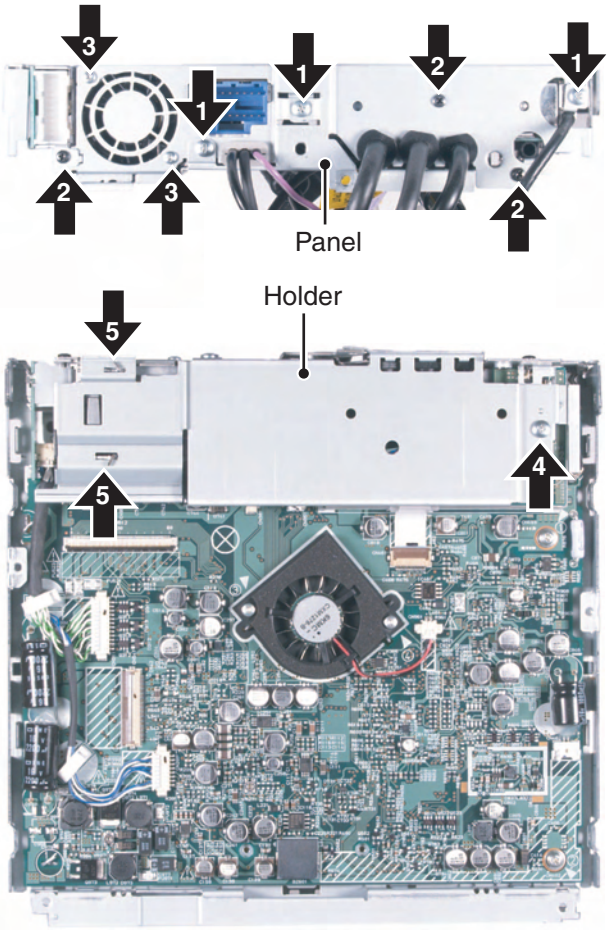

Fig.4

● Removing the Mother Unit (Fig.5)

1. Disconnect the connector.
2. Remove the two screws.
3. Remove the two screws.
4. Straighten the tabs at three locations indicated and then remove the Mother Unit.

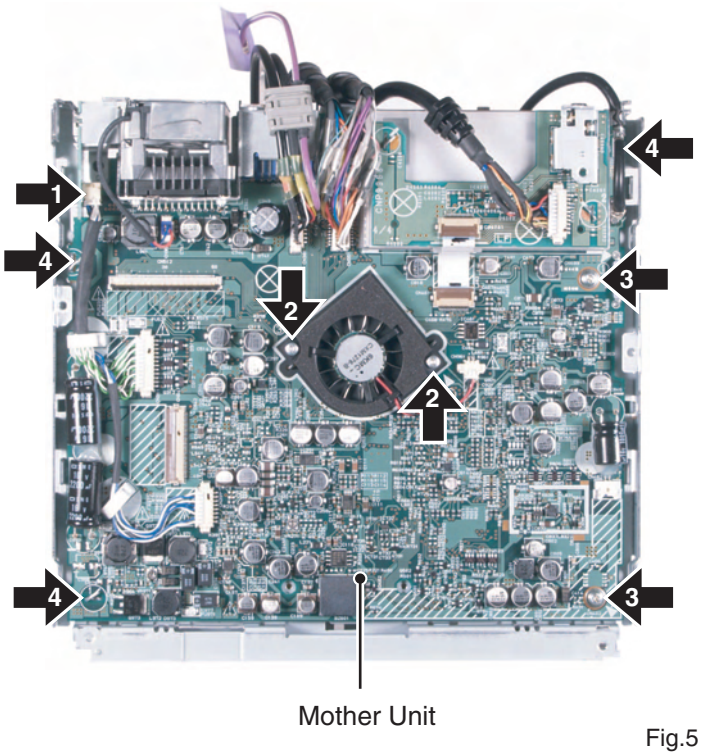

Fig.5

● Removing the Monitor PCB 1/2 (Fig.6)

1. Remove the two screws and then remove the two Guids(Right side and Left side).
2. Pull out the Monitor Assy in the direction indicated by an arrow.

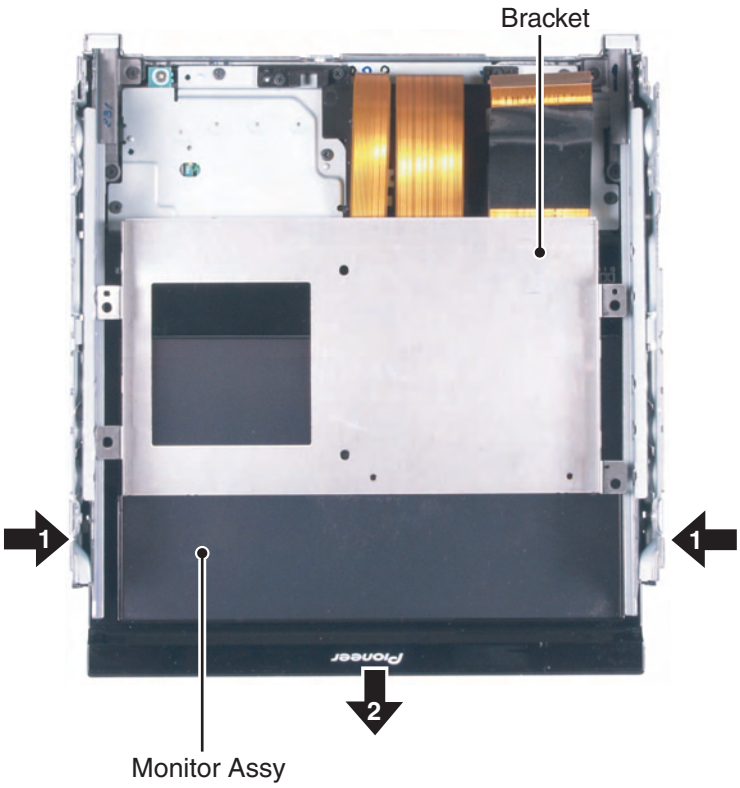

3. Remove the three screws and then remove the Cover.
4. Disconnect the connector.

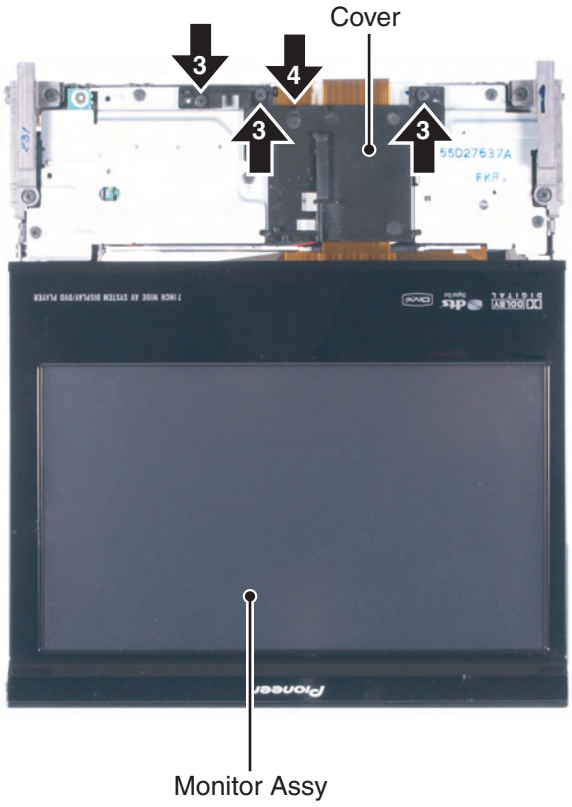

Fig.6

● Removing the Monitor PCB 2/2 (Fig.7)

1 Remove the two screws and then remove the Holder.

2 Remove the eight screws and then remove the Monitor Assy.

3 Remove the Cover Unit.

4 Disconnect the connector.

[Caution]
The Monitor Assy cannot be removed unless the Cover Unit is removed in advance after removing the screws.

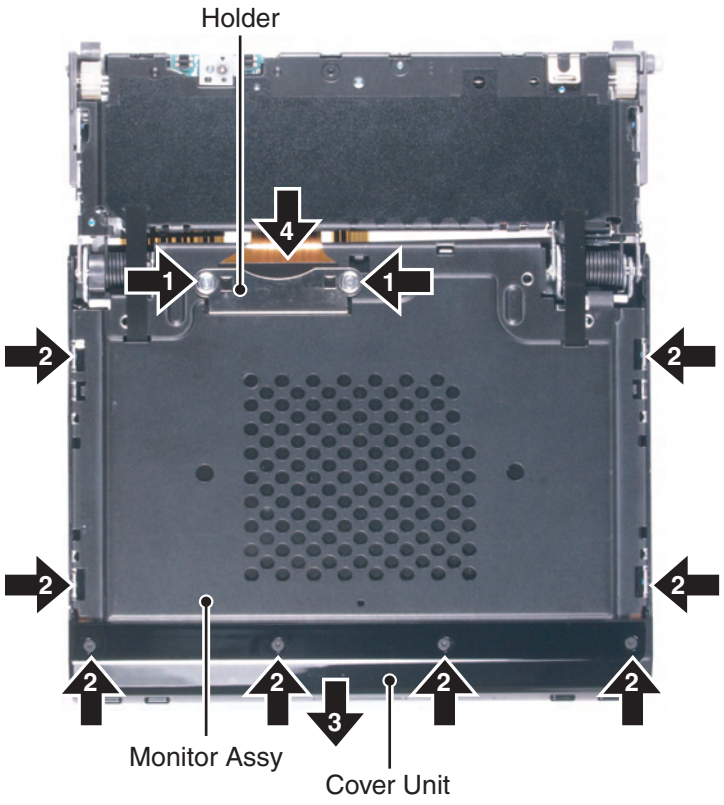

5 Disconnect the three connectors and then remove the Monitor PCB.

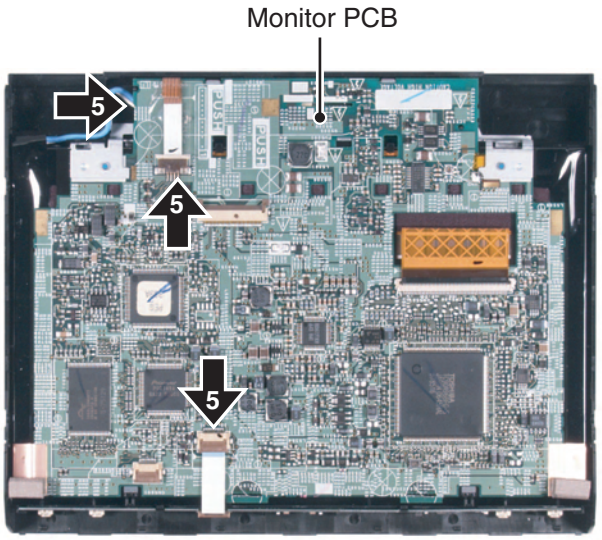

Fig.7

● How to hold the mechanism section (Fig 1)

1. Hold the main frame and the top frame.
2. As the mechanical strength of the front part of the top frame is not strong, do not hold this part.
3. Do not touch the switches provided on the top face of the mechanism section.
4. Be careful not to pull the flexible PCB on the side face.

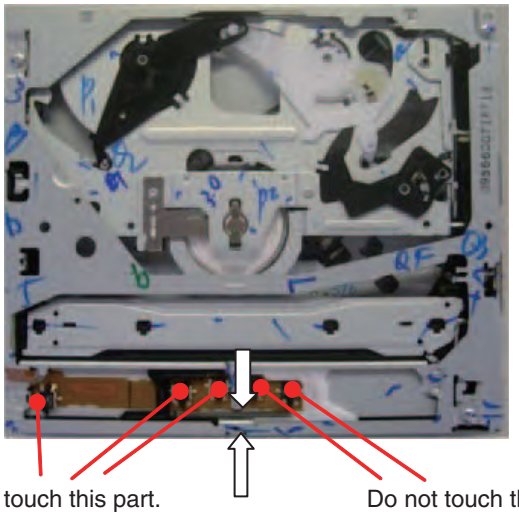

Fig 1

● How to remove the module PCB (Fig 2, Fig 3)

1. Put the mechanism section in locked state (disc load standby position).
2. Hold the mechanism module with its top face down.
3. Make the lands at 2 locations on the pick up flexible PCB short.
4. Disconnect the connectors of the pick up flexible PCB and the SPDL flexible PCB.
   (Be sure to disconnect the connectors as the flexible PCB will be damaged if the PCB is removed without removing the flexible PCB.)
5. Remove the solder joint of the lead wire of the load motor and the clamp SW.
6. Remove the two screws, and then remove the module PCB.
   (Lift up point A slightly and remove it toward B direction. Be careful as the point C is connected with a flexible PCB.)
7. Disconnect the connector of the 8-12 detection flexible PCB from the PCB.

Fig 2

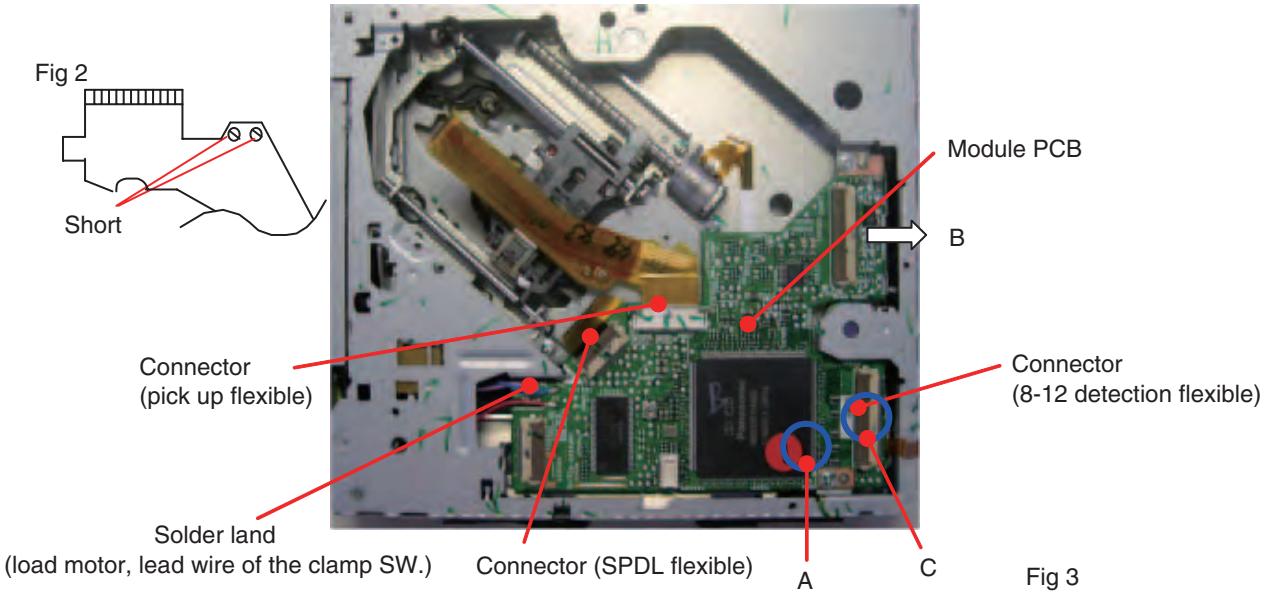

Fig 3

● How to remove the CRG motor assy (Fig 4)

1. Remove the module PCB according to the instructions in “How to remove the module PCB”.
2. Remove the Mylar tape.
3. Remove the flexible PCB of the CRG motor from the connector of the spindle motor.
4. Remove the two screws, and then remove the CRG motor assy.

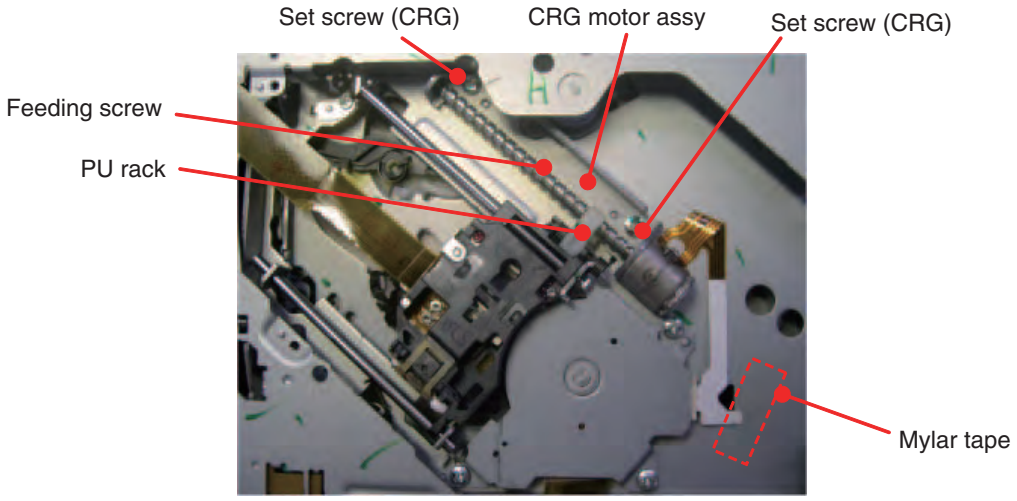

Fig 4

● How to remove the PU unit (Fig 5)

1. Remove the module PCB according to the instructions in “How to remove the module PCB”.
2. Hang the main shaft holding spring to the CRG chassis temporary hanger.
3. Remove the CRG motor assy according to the instructions in “How to remove the CRG motor assy”.
4. Remove the holding plate spring of the main shaft.
5. While lifting up the tip of the pick up rack, slide the main shaft, and remove the PU unit.

(Note) When mounting the PU unit again, make sure to do the adjustments of the devices mounted thereon according to the descriptions of the service manual. Furthermore, make sure to hang the main shaft holding spring permanently.

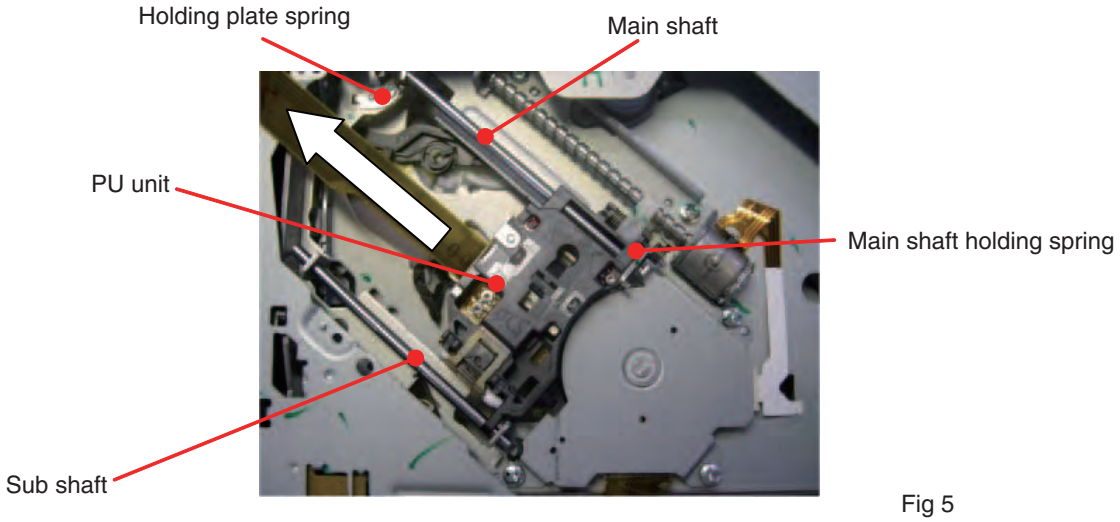

Fig 5

CRG chassis temporary hanging section

Temporary hanging

Permanent hanging

8. EACH SETTING AND ADJUSTMENT
8.1 DVD ADJUSTMENT

1) Precautions

This product uses 5 V and 3.3 V as standard voltages. The electrical potential that is the reference for signals, is not GND, but VREF (approximately 2.2 V) and VHALF (approximately 1.65 V) .

During product adjustments, if the reference voltage is mistakenly taken as GND, and a grounding contact is made, not only would it be impossible to measure the accurate electrical potential, but also the servo motor would malfunction, resulting in the application of a strong impact on the pick up. The following precautionary measures should be strictly adhered to, in order to avoid such problems.

The reference voltage and GND should not be confused when using the minus probe of a measurement device. When an oscilloscope is being used special care should be taken to make sure that the reference voltage is not connected to the probe of ch1 (on the minus side), while the probe of ch2 (on the minus side), is connected to GND. Further, since the body frame of most measurement devices have the same electrical potential as the minus side of the probe, the body frame of the measurement device should be set to floating ground.

If the reference voltage is connected to GND by mistake, turn the regulator OFF immediately, or turn the power OFF.

- Remove the filters and wires used for measurements only after the regulator has been turned OFF.
- After the power supply is turned on, regulator ON the following adjustment and measurement are promptly done.
- Whenever the product is in the test mode, the software will not take any protective action. For this reason, special care should be taken to make sure that no mechanical or electrical shock could be applied to the product when taking measurements in the test mode.
- Whenever the EJECT key is pressed to eject the disk, no other keys, other than the EJECT key, should be pressed until the disk eject action has been completed.
- Press the EJECT key only after the disk has stopped completely.
- If the product hangs up turn the power OFF immediately.
- Laser didoes may be damaged, if the volume switch for the laser power adjustment of the pick up unit, is turned.

Attention)

- Test mode starting procedure
  Reset start while pressing the ATT and RIGHT keys together.
- Test mode stopping procedure
  Reset or ACC OFF-ON.

● SKEW adjustment

When one of the following replacements has taken place, SKEW adjustment for the pick up will be required.
(1) Replacement of the pick up unit
(2) Replacement of the spindle motor
(3) Replacement of the carriage chassis
(4) Replacement of the main shaft of the pick up unit
(5) Replacement of the sub shaft of the pick up unit

・Measurement equipment and tools/jigs: Oscilloscope
Driver for SKEW adjustment → TORX driver (T2) (GGK1095)
Bond for fixing the SKEW (GEM1033)
Bond for locking the screw (Locking agents(1401M : produced by THREE BOND))

・Disc used: GGV1018

・Measurement reference: AGND2
・Measurement point: RF

・Connection drawing
DVD core unit

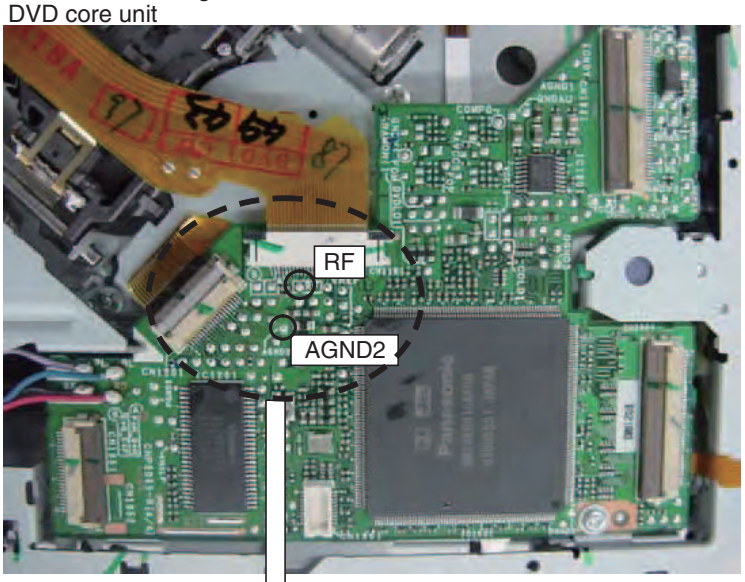

Enlargement

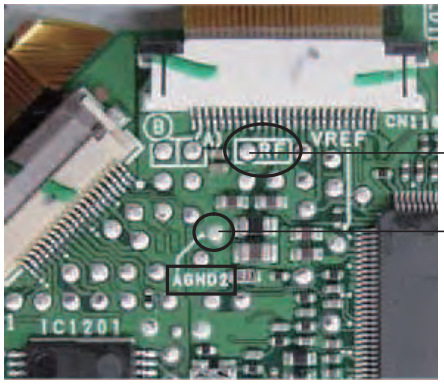

Oscilloscope

Symptom in case the adjustment is not adequate: Worsening of the error rate 10^{-3}
(Normally 10^{-4} or less.)
Large RF jitter
RF waveform distortion
Tracking drawing/Unstable servo

* Caution: Do not look into the laser light during adjustment.

There are two methods for adjustment, a method whereby the adjustment is made while monitoring the RF waveform using the oscilloscope (method ①) and a method whereby the adjustment is made while checking the RF level in value by OSD (method ②).

The adjustment procedure is shown below. Refer to the paragraph for the service test mode regarding entering of the test mode and the operation procedure.

Adjustment procedure:

1. Turn the DVD mechanism module upside down so that the pick up can be adjusted.
   When the module is turned upside down, there is a possibility that the disc is rubbed.
   So, first place a coin with the thickness of approximately 1.5mm on a desk, and set the module upside down in a way that section ① in the illustration below comes right above the coin.

2. Install the pick up. (Refer to the section regarding removal of the pick up from the mechanism unit.)
   As for the precautions in handling the pick up, refer to the precautions in handling the PU as described below.

3. Method ①:
   Connect the oscilloscope by referring to the connection drawing so that the RF signal can be monitored with AGND2 as the reference.
   Method ②:
   There is no need for setting of any equipment. Proceed to step 4.

4. Turn the power ON, and load the disc for adjustment.(GGV1018)

5. After setting the disc type to DVD layer 1 in the front end test mode, turn the power ON, and move the pick up to the inner periphery. (CRG – Home)

6. Turn the LD ON.

7. Set to focus close, and make auto adjustment for all items under that state, then set to tracking close.
   And make auto adjustment for all items under that state as well.

8. Make an intermediate periphery (ID: 100 000) search, and move the PU to intermediate periphery.

9. Method ①:
   Proceed to step 10.
   Method ②:
   After setting to Tracking Open, make all auto adjustments, and set to Tracking Close this time with a command that can be RF displayed. Make auto adjustment for all items under that state as well.

10. Use TORX driver (T2) (GGK1095) for the following.
    Method ①:
    While monitoring the RF waveform on the oscilloscope, turn SKEW adjustment screw A just a little bit in a way that the level will reach the maximum.
    While the pick up is at the intermediate periphery, turn SKEW adjustment screw B just a little bit in a way that the level will reach the maximum.
    While the pick up is at the intermediate periphery, turn SKEW adjustment screw A just a little bit in a way that the level will reach the maximum.
    (Make adjustment in the order of A -> B -> A, Please end the each adjustment by turning screw clockwise.)
    Method ②:
    While monitoring the RF level value on the OSD display, turn the SKEW adjustment screw A just a little bit in a way that the level will reach the maximum.
    While the pick up is at the intermediate periphery, turn SKEW adjustment screw B just a little bit in a way that the level will reach the maximum.
    While the pick up is at the intermediate periphery, turn SKEW adjustment screw A just a little bit in a way that the level will reach the maximum.
    (Make adjustment in the order of A -> B -> A, Please end the each adjustment by turning screw clockwise.)
    If the error is not good, please perform Method ① again.

11. Turn the power OFF in the test mode, and after confirming that the disc has stopped, eject the disc.

12. Apply adhesive for fixing the SKEW and lock the screw.
    Refer to the illustration below for the adhesion points.

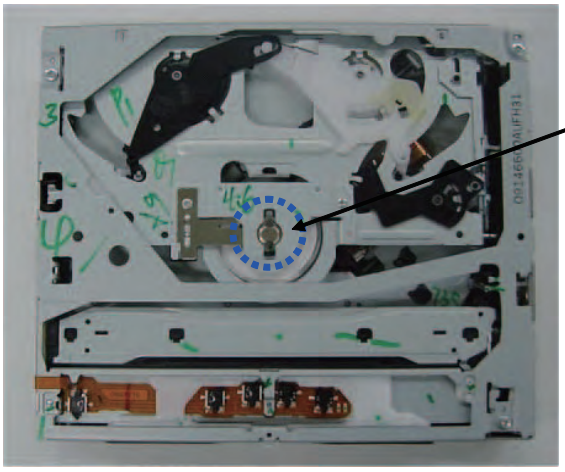

SKEW adjustment locations.

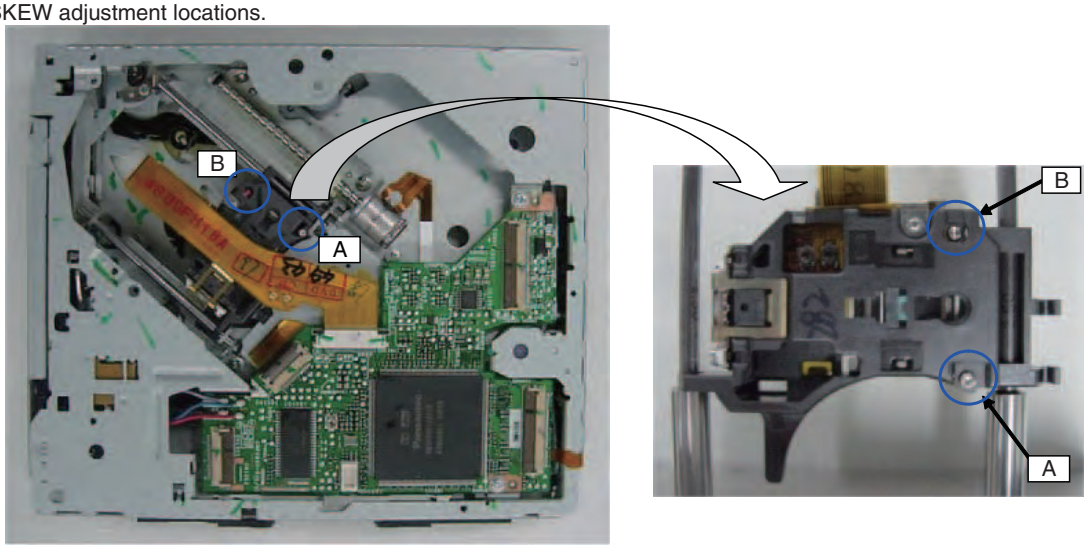

SKEW adhesive locations(GEM1033)

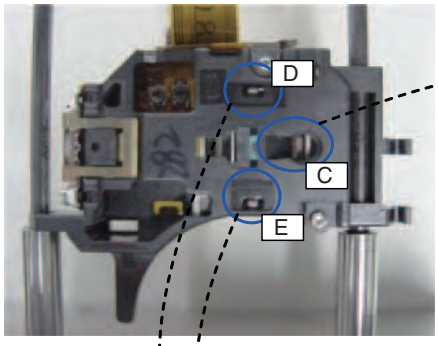

RAD-SKEW adhesive locations

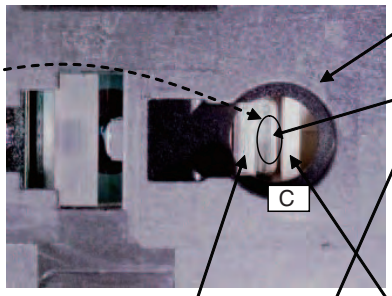

TAN-SKEW adhesive locations

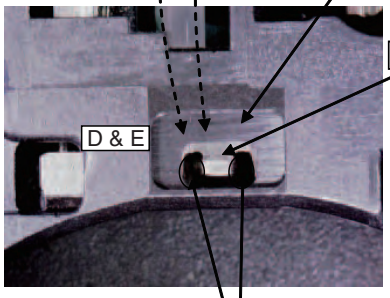

Cross section of R-SKEW adhesive locations.

* Caution: Make a cross link to both the resin section and the sheet metal section.

* Caution: Make a cross link to both the case section and the sheet metal section.

Screw locking adhesive location(1401M : produced by THREE BOND)

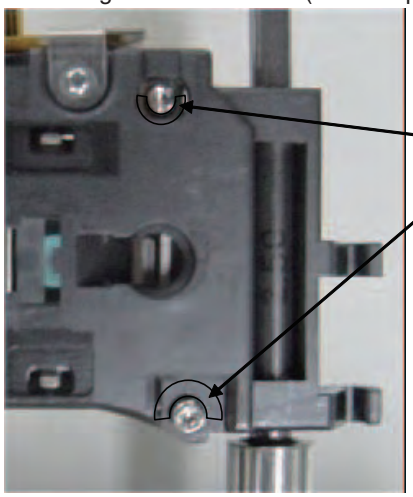

Screw locking adhesive location
Apply the locking agent for more than half of the screw head circumference.
* Caution: The locking agent shall not overflow to outside of the PU case.

Precautions in handling the PU.

* Caution: Do not touch the shaded section in the drawing below.

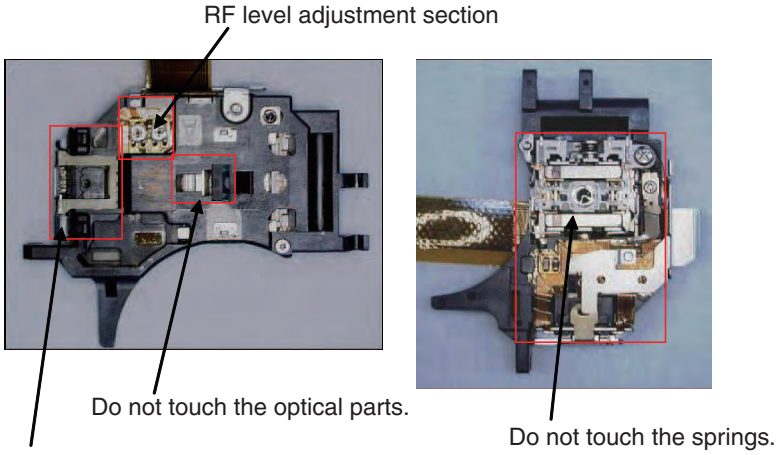

8.2 VIDEO LEVEL ADJUSTMENT

Adjustment point

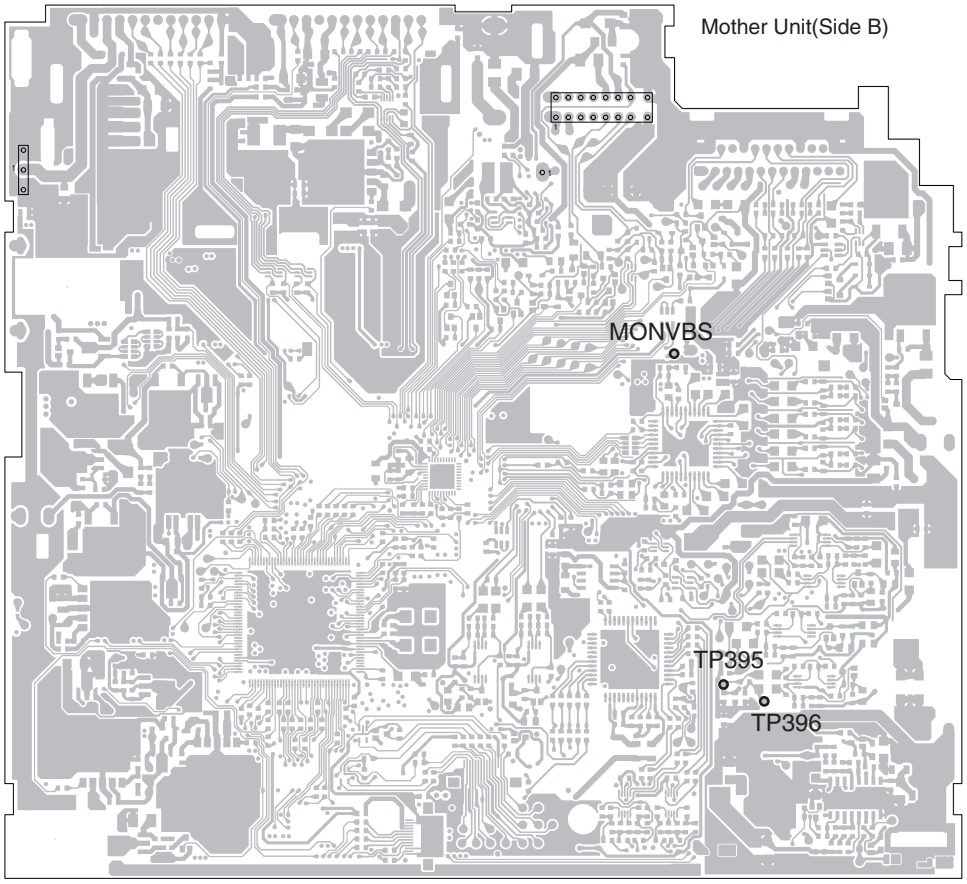

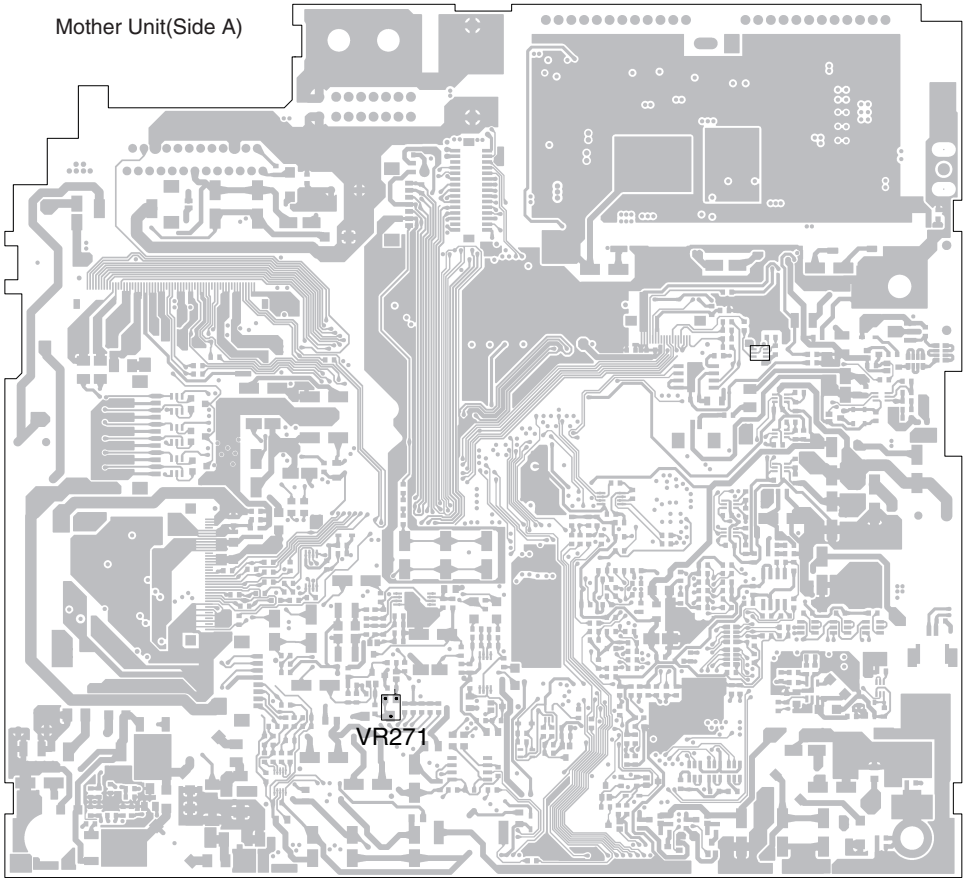

Tuning of image output: Measure level at the measuring point as shown below while DVD is being replayed.

Step	Mother PCB adjustment	Mode	Input signal (input test pin,specs, other conditions)	Output signal (measuring point, waveform)	Measuring instruments	Specs	Adjusting point
1	Main video level	AV	Input test pin: TP396····100 IRE (white 100%), 1.0 Vp-p, (input via 75 ohms) TP395····GND (VIDEO GND)	Measuring point : MONVBS 	Oscilloscope	1.35 V ± 0.05 Vp-p Measure between the sync tip and 100 IRE (top wave). Symptoms with poor adjustment. Over level : Luminance is too high. Under level : Luminance is too low.	VR271

8.3 MOTHER UNIT ADJUSTMENT

Adjustment point

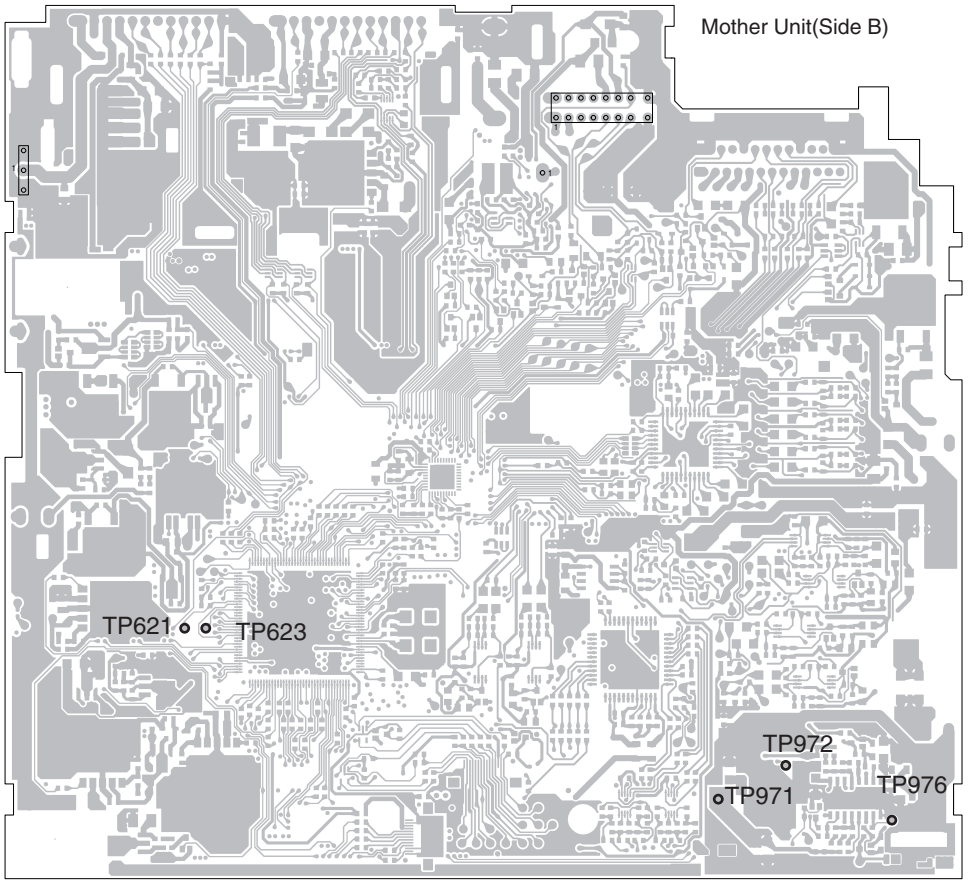

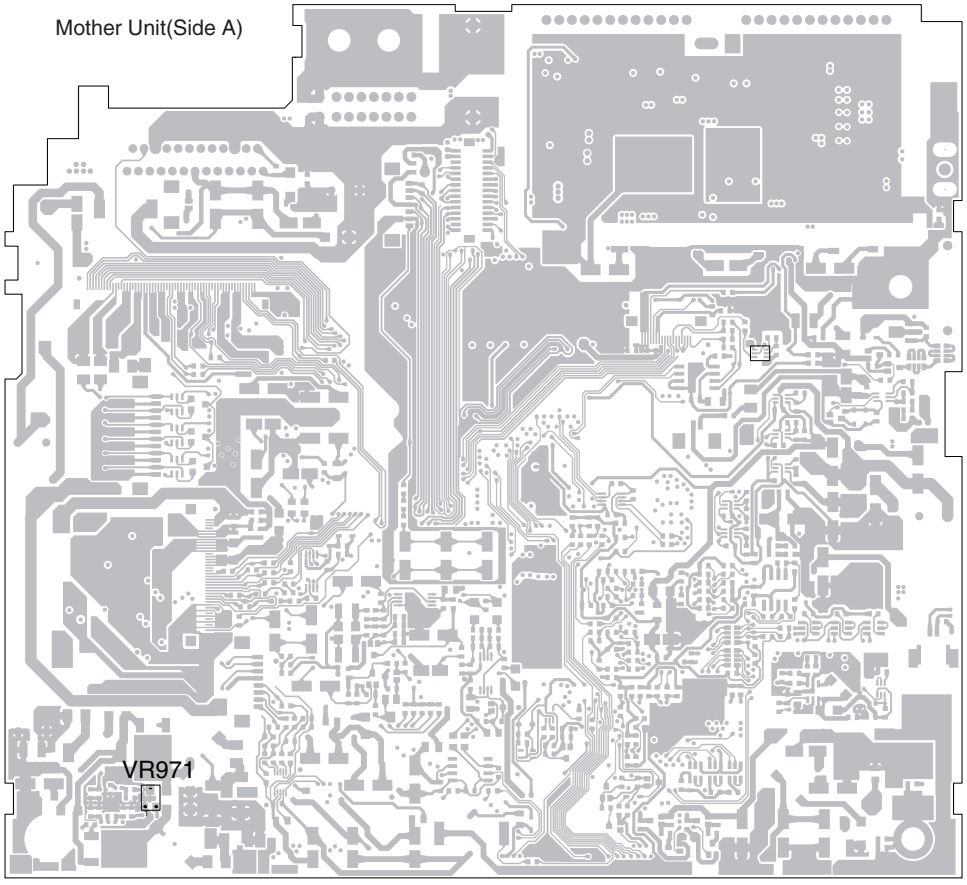

Measure with the frequency counter at the measuring point as shown below while TUNER is turned ON.

Step	Mother PCB adjustment	Mode	Input signal (input test pin,specs, other conditions)	Output signal (measuring point, waveform)	Measuring instruments	Specs	Adjusting point
1	Clock frequency Check		After the power supply is turned on, IC601 pin83(TP621) to 3.3 V	IC601 pin86(TP623)	Frequency Counter	18.874 368 MHz ± 754 Hz	
2	DC-DC converter frequency Adjustment		Connect 33 Ω (1.8 W or more) between TP 972 and GND. Connect 20 Ω (1.2 W or more) between TP 971 and GND.	TP976	Frequency Counter	370 kHz ± 5 kHz	VR841

8.4 INVERTER ADJUSTMENT

Adjustment point

Monitor PCB(Side B)

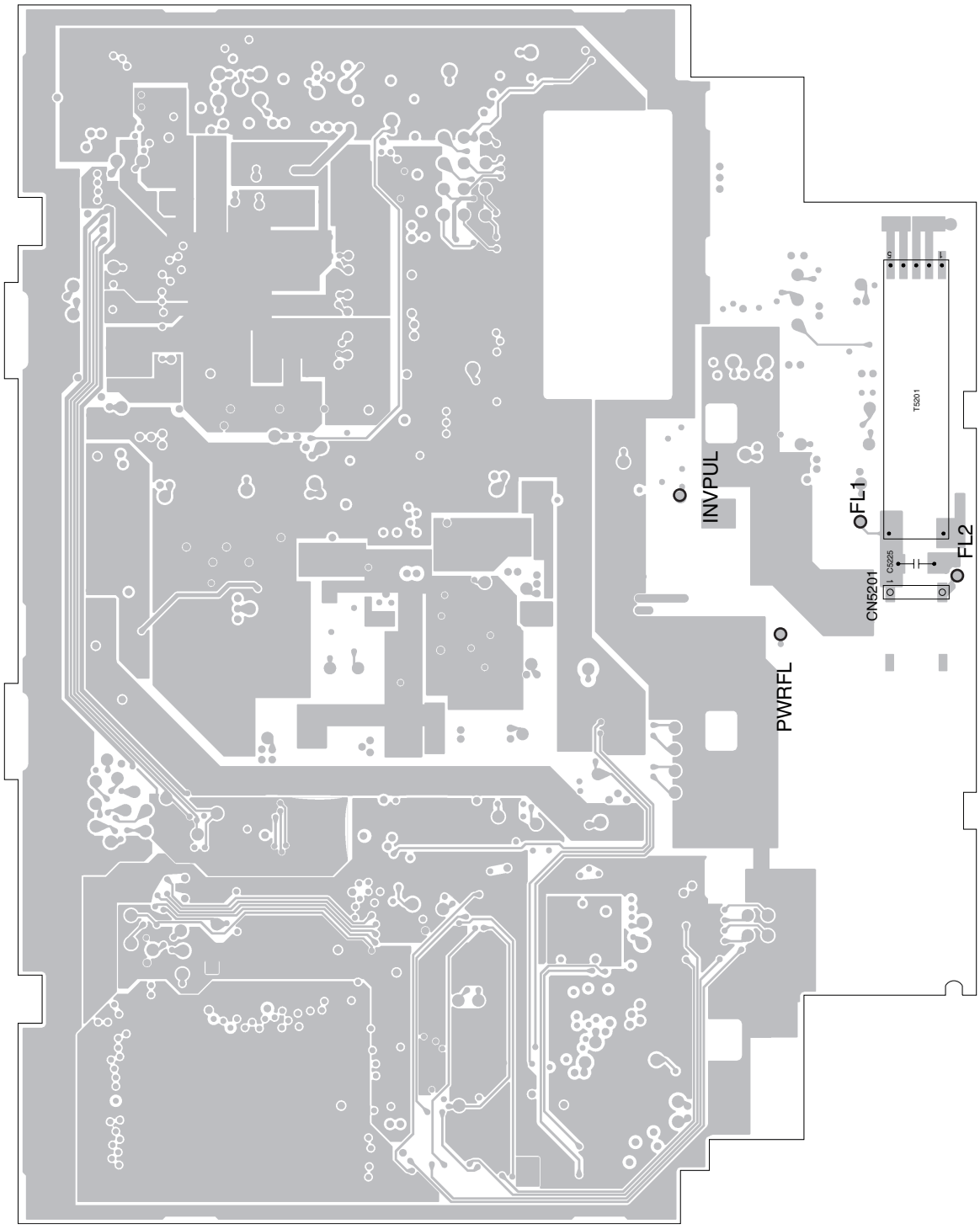

Instead of inserting LCD connector into CN5201, connect 100kΩ between TP FL1 and FL2.
Measure with the frequency counter at the measuring point as shown below.

No.	Adjustment item	Input signal	Measurement point	Adjustment point	Adjustment	Note
1	Basic drive Frequency adjustment	14.4 ± 0.2 V to TP PWRFL TP DIMDTY : GND TP FLGND : GND TP INVPUL : GND	TP FL1 TP FL2	VR5201	48.0 ± 0.1 kHz	Connect 100 kΩ between TP FL1 and FL2. Monitor the waveform after voltage division or TP FL2. Do not monitor TP FL1 directly (measurement meter may be damaged because of high voltage).
2	Check frequency switching	Input 98.0 ± 1 kHz waveform below to TP INVPUL. 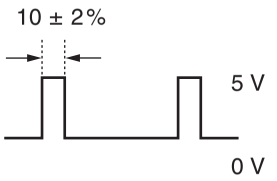	TP FL1 TP FL2	-	49.0 ± 0.5 kHz	Verify that the frequency of waveform measured in No.1 is 49 kHz.
3	Check frequency switching	Input 102.0 ± 1 kHz waveform below to TP INVPUL. 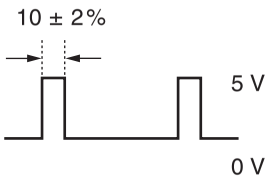	TP FL1 TP FL2	-	51.0 ± 0.5 kHz	Verify that the frequency of waveform measured in No.1 is 51 kHz.
4	Check frequency switching	Input 104.0 ± 1 kHz waveform below to TP INVPUL. 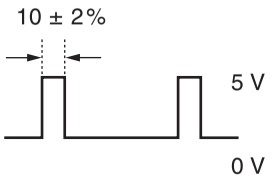	TP FL1 TP FL2	-	52.0 ± 0.5 kHz	Verify that the frequency of waveform measured in No.1 is 52 kHz.

8.5 MONITOR ADJUSTMENT

Adjustment point

Monitor PCB(Side A)

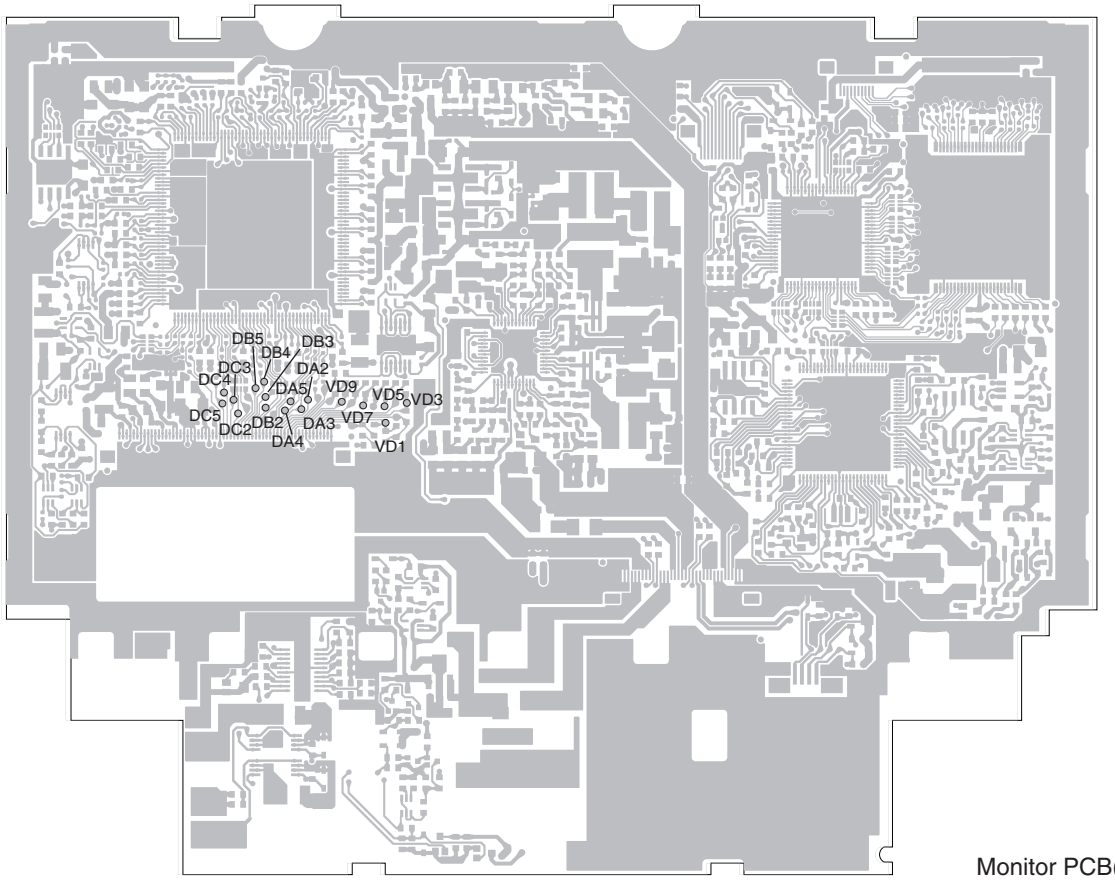

Monitor PCB(Side B)

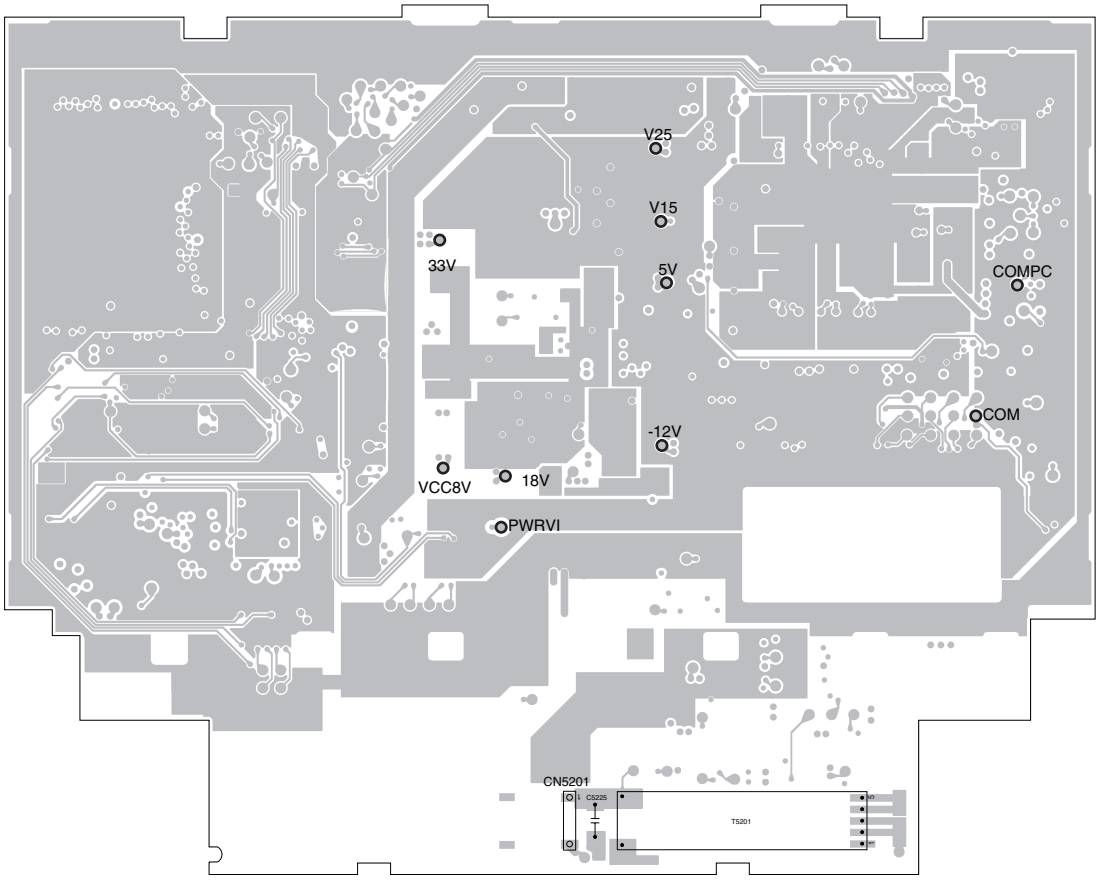

NOTE : When shutting off the power supply of TC90A96BFG-P, be careful not to energize each IC terminal. However, IIC lines (SDA and SCL) is not included in this case and it is possible to energize them with up to 5 V.

No.	Adjustment item	Input signal	Measurement point	Adjustment point	Adjustment	Note
1	Check 3.3 V power supply voltage	TP:PWRVI to 14.4 V	TP:33V	-	33V = 3.3 ± 0.25 V	
2	Check 2.5 V power supply voltage	TP:PWRVI to 14.4 V	TP:V25	-	V25 = 2.5 ± 0.15 V	
3	Check 1.5 V power supply voltage	TP:PWRVI to 14.4 V	TP:V15	-	V15 = 1.5 ± 0.08 V	
4	Check 5 V power supply voltage	TP:PWRVI to 14.4 V	TP:5V	-	5V = 4.9 ± 0.3 V	
5	Check 8 V power supply voltage	TP:PWRVI to 14.4 V	TP:VCC8V	-	VCC8V = 8.0 ± 0.5 V	
6	Check 18.5 V power supply voltage	TP:PWRVI to 14.4 V	TP:18V	-	18V = 18.5 ± 0.5 V	
7	Check -12 V power supply voltage	TP:PWRVI to 14.4 V	TP:-12V	-	-12V = -12.0 ± 0.6 V	
8	Vcom amplifier output amplitude check	No definition.	TP:COM	-	4.70 ± 0.10 V 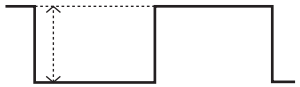	Connect LCD panel for measurement.
9	Tone voltage amplitude check V1	No definition.	TP:VD1	-	4.20 ± 0.30 V 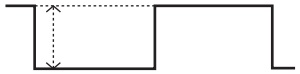	Connect LCD panel for measurement.
10	Tone voltage amplitude check V3	No definition.	CN5501 55pin (TP:VD3)	-	1.75 ± 0.10 V 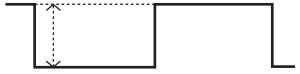	Connect LCD panel for measurement.

No.	Adjustment item	Input signal	Measurement point	Adjustment point	Adjustment	Note
11	Tone voltage amplitude adjustment V5	INo definitiont.	TP:VD5	-	0.35 ± 0.10 V 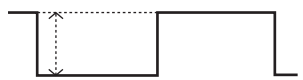	It connects with the LCD panel and it measures it.
12	Tone voltage amplitude adjustment V7	No definition.	TP:VD7	-	0.60 ± 0.10 V 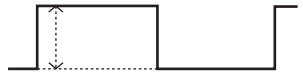	It connects with the LCD panel and it measures it.
13	Tone voltage amplitude adjustment V9	No definition.	TP:VD9	-	3.30 ± 0.20 V	It connects with the LCD panel and it measures it.
14	Check RGB digital output	Input white 100% signal from IC5802	TP CCR,CCG,CCB	-	0.70 ± 0.05 V 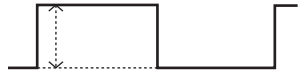	(When OSD is displayed in EEPROM adjustment mode, LOW output is mixed to the parts where there is a character.)
15	Image check of RGB signal	Input Color-bar signal from IC5802	Screen	-	-	
16	Composite level adjustment	Input composite image 10-step signal to TP MONVBS (1.35 Vpp ± 1%)	DAC output	Resistor setting of SA13h D5 - 0	The amplitude of the 9-step and the 0-step is 1.77 ± 0.05 V. 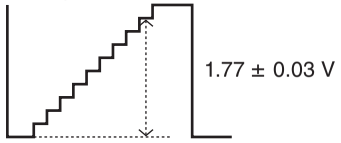	

No.	Adjustment item	Input signal	Measurement point	Adjustment point	Adjustment	Note
17	Image check	Input composite image lamp signal (monochrome) to TP MONVBS	Screen	-	Make sure that tone changes smoothly, and there is no colored area in the entire display.	Execute to verify that IC5401 digital-out is not bridged or “OPEN” ed.
18	Aging	No definition.	-	-	Leave for more than 30 minutes in operation mode.	Input white 100% signal
19	Flicker adjustment	Input black-white reverse signal per 1 line from IC5802	Screen	TP COMDC DC output	Adjust the flicker level to minimum from all directions.	Black-white reverse signal can be the input to TP MONVBS (however, adjustment in RGB comes first). Brightness level of reverse signal should be 50%. Adjustment point can be COM DC of flicker adjustment mode.

SA**h in this chart means the sub-address of TC90A96BFG-P.

Memory item list and EEPROM

	ADDRESS	Bit15	Bit14	Bit13	Bit12	Bit11	Bit10	Bit9	Bit8	Bit7	Bit6	Bit5	Bit4	Bit3	Bit2	Bit1	Bit0
RELATED DIMMER	00h	Outside light of dimmer adjustment coordinates (high)								Backlight of dimmer adjustment coordinates (high)							
	01h	Outside light of dimmer adjustment coordinates (middle)								Backlight of dimmer adjustment coordinates (middle)							
	02h	Outside light of dimmer adjustment coordinates (low)								Backlight of dimmer adjustment coordinates (low)							
	03h	Outside light threshold for dimmer (high)								Outside light threshold for dimmer (low)							
	04h	Maximum value of backlight output								Minimum value of backlight output							
	05h	Checksum															
RELATED PIP (Dot adjustment system)	06h-09h	Don't care								Don't care							
RELATED PIP (Last memory value)	0Ah	Common reverse output DC center value								Common reverse output amplitude adjustment value							
	0Bh	Don't care		Brightness R													
	0Ch	Don't care		Brightness G													
	0Dh	Don't care		Brightness B													
	0Eh	Don't care										Main Y contrast					
	0Fh	Don't care		Main horizontal enhancer						Main vertical enhancer						Don't care	
				Gain		Limiter			fo	Gain		Replicate		Coring			
	10h			Don't care								Sub Y contrast					
	11h	Don't care		Sub horizontal enhancer						Sub vertical enhancer						Don't care	
				Gain		Limiter			fo	Gain		Replicate		Coring			
	12h	γ setting ON/OFF	RGB simultaneous γslope A			R output DC offset				Don't care		RGB simultaneous γ1 inflection point					
	13h	RGB simultaneous γslope B			RGB simultaneous γ2 inflection point					RGB simultaneous γslope C			RGB simultaneous γ3 inflection point				
	14h	Don't care				G output DC offset				Don't care							
	15h	Don't care				B output DC offset				Don't care							
	16h	SA24h UPPER								SA24h LOWER							
	17h	SA25h UPPER								SA25h LOWER							
	18h	SA26h UPPER TV								SA26h LOWER TV							
	19h	SA26h UPPER								SA26h LOWER							
	1Ah	SA27h UPPER TV								SA27h LOWER TV							
	1Bh	SA27h UPPER								SA27h LOWER							
	1Ch	SA46h UPPER								SA46h LOWER							
	1Dh	SA47h UPPER								SA47h LOWER							
	1Eh	SA48h UPPER								SA48h LOWER							
	1Fh	SA49h UPPER								SA49h LOWER							
	20h	SA4Ah UPPER								SA4Ah LOWER							
	21h	SA4Bh UPPER								SA4Bh LOWER							
	22h	SA4Ch UPPER								SA4Ch LOWER							
	23h	SA4Dh UPPER								SA4Dh LOWER							
	24h	SA4Eh UPPER								SA4Eh LOWER							
	25h	SA4Fh UPPER								SA4Fh LOWER							
	26h-2Bh	Don't care					Main SYNC IN sampling		Main PLL3 gain down	Main H-PLL3							
	2Ch,2Dh	Don't care								Don't care							
	2Eh	Flicker adjustment result								Don't care							
	2Fh	Checksum															
RELATED PIP (Dot adjustment system --- Factory shipment value)	30h-33h	Don't care								Don't care							

	ADDRESS	Bit15	Bit14	Bit13	Bit12	Bit11	Bit10	Bit9	Bit8	Bit7	Bit6	Bit5	Bit4	Bit3	Bit2	Bit1	Bit0
Touch correction value (Factory shipment value)	34h	Touch panel X coordinate 1								Touch panel Y coordinate 1							
	35h	Touch panel X coordinate 2								Touch panel Y coordinate 2							
	36h	Touch panel X coordinate 3								Touch panel Y coordinate 3							
	37h	Touch panel X coordinate 4								Touch panel Y coordinate 4							
	38h	Touch panel X coordinate 5								Touch panel Y coordinate 5							
	39h	Touch panel X coordinate 6								Touch panel Y coordinate 6							
	3Ah	Touch panel X coordinate 7								Touch panel Y coordinate 7							
	3Bh	Touch panel X coordinate 8								Touch panel Y coordinate 8							
	3Ch	Touch panel X coordinate 9								Touch panel Y coordinate 9							
	3Dh	Touch panel X coordinate 10								Touch panel Y coordinate 10							
	3Eh	Touch panel X coordinate 11								Touch panel Y coordinate 11							
	3Fh	Touch panel X coordinate 12								Touch panel Y coordinate 12							
	40h	Touch panel X coordinate 13								Touch panel Y coordinate 13							
	41h	Touch panel X coordinate 14								Touch panel Y coordinate 14							
	42h	Touch panel X coordinate 15								Touch panel Y coordinate 15							
	43h	Touch panel X coordinate 16								Touch panel Y coordinate 16							
	44h	Don't care								Touch panel calibration adjustment result							
	45h	Checksum															
Touch outermost circumference correction value (Factory shipment value)	46h	Outermost circumference X min								Outermost circumference Y min							
	47h	Outermost circumference X max								Outermost circumference Y max							
	48h	Don't care								Touch panel outermost circumference adjustment result							
	49h	Checksum															
Touch outermost circumference correction value	4Ah	Outermost circumference X min coordinate value for correction								Outermost circumference Y min coordinate value for correction							
	4Bh	Outermost circumference X max coordinate value for correction															
	4Ch	Outermost circumference Y max coordinate value for correction															
	4Dh	Checksum															
Touch correction coordinates (User calibration value)	4Eh	(USER)Touch panel X coordinate 1								(USER)Touch panel Y coordinate 1							
	4Fh	(USER)Touch panel X coordinate 2								(USER)Touch panel Y coordinate 2							
	50h	(USER)Touch panel X coordinate 3								(USER)Touch panel Y coordinate 3							
	51h	(USER)Touch panel X coordinate 4								(USER)Touch panel Y coordinate 4							
	52h	(USER)Touch panel X coordinate 5								(USER)Touch panel Y coordinate 5							
	53h	(USER)Touch panel X coordinate 6								(USER)Touch panel Y coordinate 6							
	54h	(USER)Touch panel X coordinate 7								(USER)Touch panel Y coordinate 7							
	55h	(USER)Touch panel X coordinate 8								(USER)Touch panel Y coordinate 8							
	56h	(USER)Touch panel X coordinate 9								(USER)Touch panel Y coordinate 9							
	57h	(USER)Touch panel X coordinate 10								(USER)Touch panel Y coordinate 10							
	58h	(USER)Touch panel X coordinate 11								(USER)Touch panel Y coordinate 11							
	59h	(USER)Touch panel X coordinate 12								(USER)Touch panel Y coordinate 12							
	5Ah	(USER)Touch panel X coordinate 13								(USER)Touch panel Y coordinate 13							
	5Bh	(USER)Touch panel X coordinate 14								(USER)Touch panel Y coordinate 14							
	5Ch	(USER)Touch panel X coordinate 15								(USER)Touch panel Y coordinate 15							
	5Dh	(USER)Touch panel X coordinate 16								(USER)Touch panel Y coordinate 16							
	5Eh	Don't care								(USER)Touch panel outermost circumference adjustment result							
Touch outermost circumference value (User calibration value)	5Fh	(USER)Outermost circumference X min								(USER)Outermost circumference Y min							
	60h	(USER)Outermost circumference X max								(USER)Outermost circumference Y max							
	61h	Don't care								(USER)Touch panel outermost circumference adjustment result							
AD correction touch	62h	Touch AD correction value X coordinates								Touch AD correction value Y coordinates							
	63h	(USER)Touch AD correction value X coordinates								(USER)Touch AD correction value Y coordinates							
Others	64h	EEPROM completion								EJECT lock status value							

8.6 MONITOR TEST MODE

[Outline]

It is a mode used to adjust each preset value stored in the EEPROM for storing the preset values.
The adjusted values are stored in the EEPROM for storing the preset values.

[Method for Mode IN]

The method for Mode IN varies depending on the operational environment.

- When operated as a unit
  Reset the monitor micro computer while the [STEST1] terminal is set to Low and the [EPRTEST] terminal is set to Low.
- When operated as a product
  Reset the monitor micro computer while the [STEST1] terminal is set to High and the [EPRTEST] terminal is set to Low.
  Or, turn the power ON while pressing DISP key and FLIP DOWN key.

[Basic explanation on each menu]

- In the "setting content", adjustment range, initial value, and displayed character string of the items preset in each menu are described.

[Example) Setting content]

Setting item		Adjustment range	Initial value
Content	Displayed character string		
Dot search threshold	TH DOT	0-255	112
YS search threshold	TH YS	0-4	3
Phase search threshold	TH PHASE	0-255	112
X disp	X DISP	0-63	32
YS disp	YS DISP	0-4	2

Character string displayed on the screen.

- In the "display specifications", the screen actually displayed under each menu is explained.
  Display example is shown below for explanation.

[Example) Display specifications]

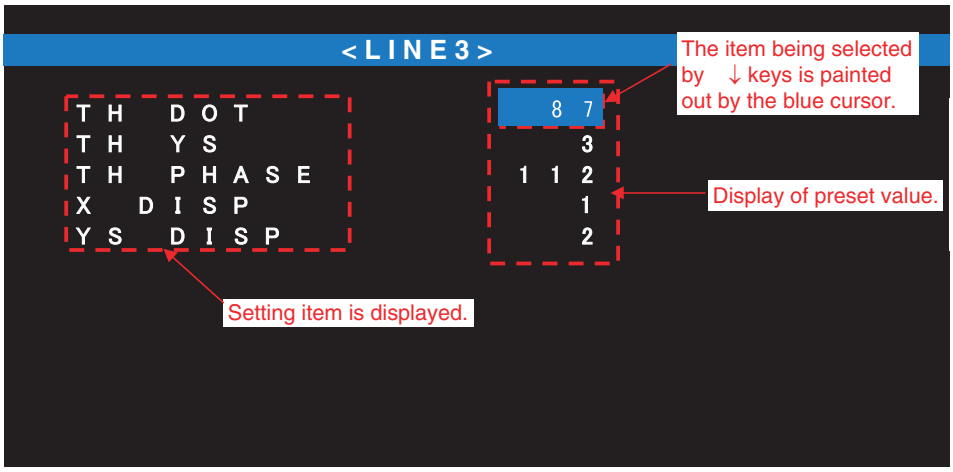

- Cursor color
  When accessing normally to EEPROM:
  The cursor color will change blue → red → blue.
  (The bule color continues for the convenience of the display cycle.But it is not an error.)
  When accessing abnormally to EEPROM(error):
  The cursor color will stay red (blue → red → red) even if the key is released.
  Note) When a value is changed continuously, the cursor color may change blue → red → red → ... → blue.
  But it is not an error.
  (The red color continues for the convenience of the display cycle.)

[Flicker adjustment menu]

[Setting content]

Setting item		Adjustment range	Initial value
Content	Displayed character string		
Common inverted output center value	COM DC	0-255	92

[Line adjustment 1 menu]

[Setting content]

Setting item		Adjustment range	Initial value
Content	Displayed character string		
Bright	BRIGHT	0-255	150
RGB simultaneous contrast(SA0C[D7-0])	CONTRAST	0-255	168
Common inverted output amplitude adjusted value	COM AMP AJ	0-255	150
R output DC offset(SA1A[D11-8])	ROUT BIAS	0-15	8
G output DC offset(SA1C[D11-8])	GOUT BIAS	0-15	8
B output DC offset(SA1E[D11-8])	BOUT BIAS	0-15	8
Main Y contrast(SA0F[D5-0])	RGB CNTRST	0-63	34
Sub Y contrast(SA13[D5-0])	CMP CNTRST	0-63	26
Dither bit(SA0D[D15])	DITHER BIT	0-1	0(OFF)

- The bright value is determined by the image quality setting table based on the user setting step and the common inverted output amplitude adjusted value (COM AMPAJ).
  This bright value controls the output of [DACDI] of the monitor micro computer terminal.
  Supplement 1) When the bright value is changed in the test mode, however, it will not be reflected in the user setting step value.
  Supplement 2) In the test mode during monitor unit operation, the user setting step will not be reflected in the bright value calculation.

Note 1... The "black density (=bright)" adjustment by the user is accomplished only by controlling the common inverted output amplitude, and the brightness of the double window IC is not used.
Note 2... The content of bright and of RGB simultaneous contrast are reference values (adjustable though) only when adjusting other items, and are not stored in the EEPROM.
Note 3... Be careful as the content of R(G/B) output DC offset, main Y contrast and sub Y contrast are different between the displayed values (EEPROM written values) and the register setting values in the double window IC.
(Because the relationship between the double window IC register value and the screen output value is not linear, there is a need for conversion by software.)

The cases where the displayed value (EEPROM written values) and the register setting values in the double window IC are different are summarized below.

[R(G/B) output DC offset]

Displayed value (=adjusted value) (DEC)	EEPROM written value (DEC)	Double window IC register value (BIN)	
15	15	0111	(MAX)
14	14	0110	
:	:	:	
9	9	0001	
8	8	0000	(TYP)
7	7	11111	
:	:	:	
1	1	1001	
0	0	1000	(MIN)

[Main Y contrast, sub Y contrast]

Displayed value (=adjusted value) (DEC)	E2PROM written value (DEC)	Double window IC register value (BIN)	
63	63	011111	(MAX)
62	62	011110	
:	:	:	
33	33	000001	
32	32	000000	(TYP)
31	31	111111	
:	:	:	
1	1	100001	
0	0	100000	(MIN)

[Line adjustment 2 menu]

[Setting content]

Setting item		Adjustment range	Initial value
Content	Displayed character string		
RGB & YS horizontal positioning(SA2B[D15-8])	DOT H POSIT	0-255	63
YS sampling phase 1(SA2D[D15-12])	YS SAMPL	0-15	12
AD sampling phase B(SA2D[D11-8])	B SAMPL	0-15	12
AD sampling phase G(SA2D[D7-4])	G SAMPL	0-15	12
AD sampling phase R(SA2D[D3-0])	R SAMPL	0-15	12
YS internal delay adjustment(SA2F[D3-0])	YS DELAY	0-15	12

Note 1... Be careful as the displayed value (EEPROM written value) and the register setting values in the double window IC are different for the following items.
(Because the relationship between the double window IC register value and the screen output value is not linear, there is a need for conversion by software.)

- **YS sampling phase 1**
- **AD sampling phase B**
- **AD sampling phase G**
- **AD sampling phase R**
- **YS internal delay adjustment**

The cases where the displayed value (EEPROM written values) and the register setting values in the double window IC are different are summarized below.

[YS sampling phase 1, AD sampling phase B/G/R, YS internal delay adjustment]

Displayed value (=adjusted value) (DEC)	E2PROM written value (DEC)	Double window IC register value (BIN)	
15	15	0111	(MAX)
14	14	0110	
:	:	:	
9	9	0001	
8	8	0000	(TYP)
7	7	1111	
:	:	:	
1	1	1001	
0	0	1000	(MIN)

[Line adjustment 3 menu]

[Setting content]

Setting item		Adjustment range	Initial value
Content	Displayed character string		
Dot search threshold	TH DOT	0-255	87
YS search threshold	TH YS	0-4	3
Phase search threshold	TH PHASE	0-255	112
X disp	X DISP	0-63	1
YS disp	YS DISP	0-4	2

[Line adjustment 4 menu]

[Setting content]

Setting item		Adjustment range	Initial value
Content	Displayed character string		
Main horizontal enhancer gain(SA10[D13-12])	M H GAIN	0-3	0
Main horizontal enhancer limiter(SA10[D11-10])	M H LIMIT	0-3	0
Main horizontal enhancer f0(SA10[D8])	M H F0	0-1	0
Main vertical enhancer gain(SA10[D7-6])	M V GAIN	0-3	0
Main vertical enhancer return(SA10[D5-4])	M V ORI	0-3	0
Main vertical enhancer corering(SA10[D3-2])	M V CORE	0-3	0

[Line adjustment 5 menu]

[Setting content]

Setting item		Adjustment range	Initial value
Content	Displayed character string		
Sub horizontal enhancer gain(SA10[D13-12])	S H GAIN	0-3	0
Sub horizontal enhancer limiter(SA10[D11-10])	S H LIMIT	0-3	1
Sub horizontal enhancer f0(SA10[D8])	S H F0	0-1	1
Sub vertical enhancer gain(SA10[D7-6])	S V GAIN	0-3	0
Sub vertical enhancer return(SA10[D5-4])	S V ORI	0-3	1
Sub vertical enhancer corering(SA10[D3-2])	S V CORE	0-3	2

[Line adjustment 6 menu]

[Setting content]

Setting item		Adjustment range	Initial value
Content	Displayed character string		
Brightness R(SA0C[D13-8])	BRIGHT R	0-63	16
Brightness G(SA0D[D13-8])	BRIGHT G	0-63	16
Brightness B(SA0E[D13-8])	BRIGHT B	0-63	16
γ correction ON/OFF(SA1A[D15])	GAMMA		OFF
RGB simultaneous ? 1 inflection point(SA1A[D5-0])	GAMMA 1	0-63	0
RGB simultaneous ? 2 inflection point(SA1B[D12-8])	GAMMA 2	0-31	4
RGB simultaneous ? 3 inflection point(SA1B[D4-0])	GAMMA 3	0-31	1
RGB simultaneous ? inclination A(SA1A[D14-12])	GAMMASLP A	0-7	4
RGB simultaneous ? inclination B(SA1B[D15-13])	GAMMASLP B	0-7	1
RGB simultaneous ? inclination C(SA1B[D7-5])	GAMMASLP C	0-7	1

Note 1... Be careful as the displayed value (EEPROM written value) and the register setting values in the double window IC are different for the following items.
(Because the relationship between the double window IC register value and the screen output value is not linear, there is a need for conversion by software.)

- **Brightness R**
- **Brightness G**
- **Brightness B**

The cases where the displayed value (EEPROM written values) and the register setting values in the double window IC are different are summarized below.

[Brightness R/G/B]

Displayed value (=adjusted value) (DEC)	E2PROM written value (DEC)	Double window IC register value (BIN)	
63	63	011111	(MAX)
62	62	011110	
:	:	:	
33	33	000001	
32	32	000000	(TYP)
31	31	111111	
:	:	:	
1	1	100001	
0	0	100000	(MIN)

[Line adjustment 7 menu]

[Setting content]

Setting item		Adjustment range	Initial value
Content	Displayed character string		
Main PLL0(SA24[D15-8])	MAIN PLL0	0-255	158
Main PLL1(SA24[D7-0])	MAIN PLL1	0-255	13
Main PLL2(SA25[D15-8])	MAIN PLL2	0-255	204
Main PLL3(SA25[D7-0])	MAIN PLL3	0-255	4

[Line adjustment 8 menu]

[Setting content]

Setting item		Adjustment range	Initial value
Content	Displayed character string		
During TV, sub PLL0(SA26[D15-8])	SUB PLL0 TV	0-255	140
During TV, sub PLL1(SA26[D7-0])	SUB PLL1 TV	0-255	136
Other, sub PLL0(SA27[D15-8])	SUB PLL0	0-255	140
Other, sub PLL1(SA27[D7-0])	SUB PLL1	0-255	141
During TV, sub PLL2(SA28[D15-8])	SUB PLL2 TV	0-255	100
During TV, sub PLL3(SA28[D7-0])	SUB PLL3 TV	0-255	68
Other, sub PLL2(SA29[D15-8])	SUB PLL2	0-255	152
Other, sub PLL3(SA29[D7-0])	SUB PLL3	0-255	107

[Line adjustment 9 menu]

[Setting content]

Setting item		Adjustment range	Initial value
Content	Displayed character string		
SA46[D15-8]	SA46H UPPER	0-255	2
SA46[D7-0]	SA46H LOWER	0-255	0
SA47[D15-8]	SA47H UPPER	0-255	0
SA47[D7-0]	SA47H LOWER	0-255	0
SA48[D15-8]	SA48H UPPER	0-255	0
SA48[D7-0]	SA48H LOWER	0-255	0
SA49[D15-8]	SA49H UPPER	0-255	0
SA49[D7-0]	SA49H LOWER	0-255	0
SA4A[D15-8]	SA4AH UPPER	0-255	0
SA4A[D7-0]	SA4AH LOWER	0-255	0

[Line adjustment 10 menu]

[Setting content]

Setting item		Adjustment range	Initial value
Content	Displayed character string		
SA4B[D15-8]	SA4BH UPPER	0-255	0
SA4B[D7-0]	SA4BH LOWER	0-255	0
SA4C[D15-8]	SA4CH UPPER	0-255	0
SA4C[D7-0]	SA4CH LOWER	0-255	0
SA4D[D15-8]	SA4DH UPPER	0-255	0
SA4D[D7-0]	SA4DH LOWER	0-255	0
SA4E[D15-8]	SA4EH UPPER	0-255	0
SA4E[D7-0]	SA4EH LOWER	0-255	0
SA4F[D15-8]	SA4FH UPPER	0-255	0
SA4F[D7-0]	SA4FH LOWER	0-255	0

[Dimmer parameter setting menu]

[Setting content]

Setting item		Adjustment range	Initial value
Content	Displayed character string		
Backlight output max value	BL MAX	0x00-0xFF	C4
Backlight output min value	BL MIN	0x00-0xFE	59
Dimmer threshold value (high)	REF H	0x01-0xFE	C0
Dimmer threshold value (low)	REF L	0x00-0xFD	60
External light point (high)	LUM H	0x02-0xFF	E2
External light point (medium)	LUM M	0x01-0xFE	87
External light point (low)	LUM L	0x00-0xFD	52
Backlight point (high)	BL H	0x00-0xFF	C4
Backlight point (medium)	BL M	0x00-0xFF	C4
Backlight point (low)	BL L	0x00-0xFF	68

- The data of the points (coordinates) for the dimmer is stored in the EEPROM but not used for CS calculation as it is changed by the user operation.

Note 1... The adjustment range of each item listed above is the range applicable when the following relationships are satisfied.
The value which destroys the relationship below cannot be set even if it is within the adjustment range.

- **Regarding the backlight output minimum value, there is a relationship where; "backlight output minimum value < backlight output maximum value" and "backlight output minimum value ≦ backlight point (low)"**
- **"External light point (low) ≦ dimmer threshold value (low) < external light point (medium) ≦ ≦ dimmer threshold value (high) < external light point (high)"**
- **"Backlight point (low) ≦ backlight point (medium) ≦ backlight point (high) ≦ ≦ backlight output maximum value"**

[Operational specifications]

Operational description	Main unit key	Remote controller key
Main page select -	PGM(TA)	BAND/ESC
Main page select +	DISP	BACK
Selection cursor upward movement	–	↑
Selection cursor downward movement	–	↓
Item content adjustment	–	←
Item content adjustment	–	→

8.7 CALIBRATION TEST

[Mode IN method]

After pressing [PGM+OPEN/CLOSE], press RESET and START. Then the screen will change to [touch panel adjustment mode].

[Menu types for mode]

Calibration test mode consists of the following menu.
(By clicking each menu, you can read the explanation for each menu.)

TOP menu
- Outermost circumference Inspection
- 16 points adjustment
- Coordinate inspection
- Calibration verification
- Data initialization

0. Explanation of the TOP menu

[Operational specifications]

Operational description	Remote controller key
Menu determination	MENU_ENTER
Selection cursor up movement	↑
Selection cursor down movement	↓

Select the menu desired to be adjusted using the up/down key (↑ ↓), then press ENTER key to enter into the selected menu.

Note 1) Calibration menu can be selected only when adjustment of the outermost circumference has been completed normally.

[Display specifications]

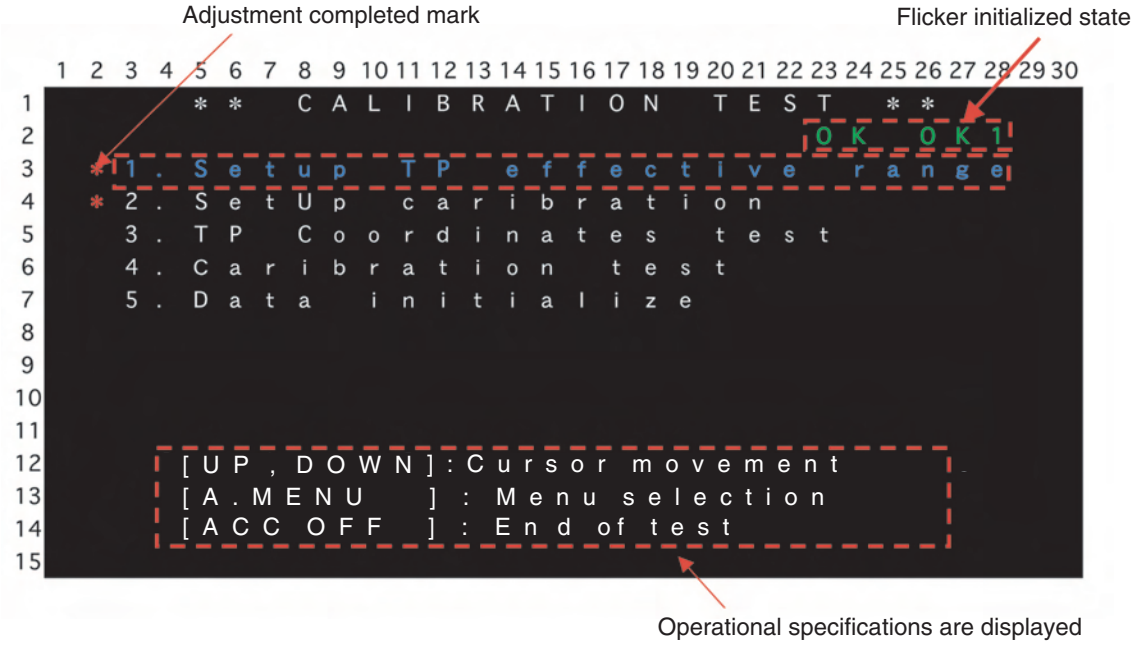

Conditions for lighting of the adjustment complete mark "✻ ".

Outermost circumference inspection :
In case the outermost circumference inspection has been completed normally.

16 points adjustment :
In case the calibration has been completed normally.

Conditions for the adjustment complete mark "✻ " to go out

Outermost circumference inspection :
In case the outermost circumference inspection has never been performed.
In case the EEPROM initialization has been performed.
In case the adjustment value has been initialized.

16 points adjustment :
In case the 16 points adjustment has never been performed.
In case the EEPROM initialization has been performed.
In case the adjustment value has been initialized.

1. Set up TP effective range

[Outline]

Outermost circumference value of X and Y is obtained by tracing the outermost circumference of the touch panel screen.
When exiting the menu screen by pressing ENTER key, the captured value is stored in the EEPROM.
Furthermore, when storing the value, checking is made as to whether the value is within the range or not.
If the value is within the range, OK is displayed, and X/Y upper and lower limit value and normal ending information, total of 5 byte data, are written in the EEPROM. (In or out of the range check is conducted according to the [Table of allowable range of setting value] shown below.)

In the following cases, however, NG will be displayed without storing the EEPROM captured value.

When the set value is outside of the range. (When the value exceeded the [Table of allowable range of setting value] below.)
However, "adjustment NG information" (1 byte) is written into the EEPROM.
When writing into the EEPROM failed.

The transition of the state for the above described outermost circumference inspection is outlined below.

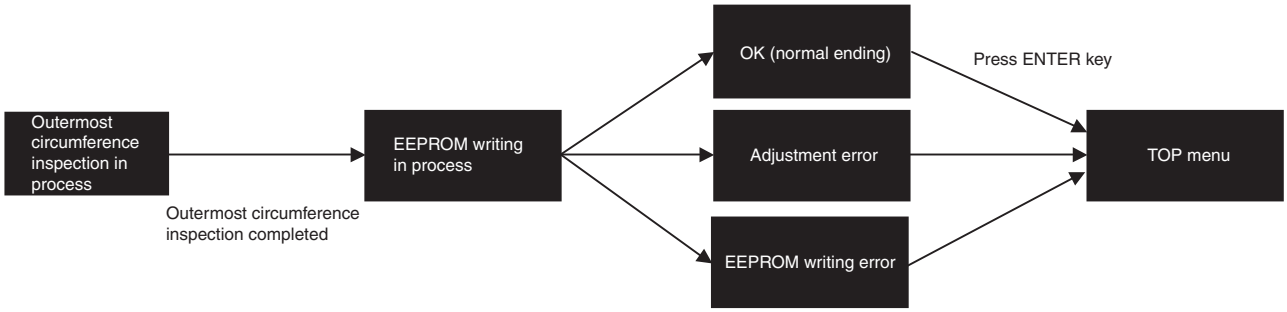

Refer to the "Memory item list and EEPROM" for the stored area of the setting value in the EEPROM. Initial value and setting value allowable range are as shown below.

[Table of BEFORE initial value]

Coordinate	Minimum value	Maximum value
X	43	247
Y	50	238

[Table of AFTER initial value]

Coordinate	Minimum value	Maximum value
X	90	180
Y	90	180

[Table of setting value allowable range]

Coordinate	Minimum value	Maximum value
X	0~72	205~255
Y	0~80	205~255

[Display specifications]

Outermost circumference inspection in process

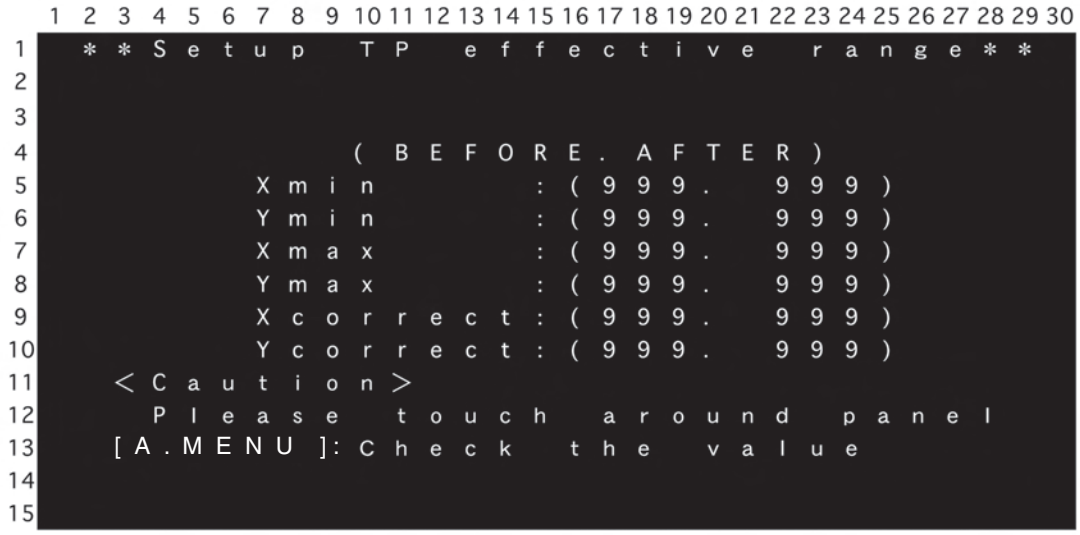

X/Y information of [MIN] and [MAX] of the outermost circumference are displayed.
[BEFOR] indicates the value stored in the EEPROM.
[AFTER] indicates MIN/MAX of the A/D value currently captured.

When ended normally.

The data written are as follows.
Upper limit value and lower limit value of X.
Upper limit value and lower limit value of Y.
Adjustment OK information.

When the captured value is outside of the allowable range.

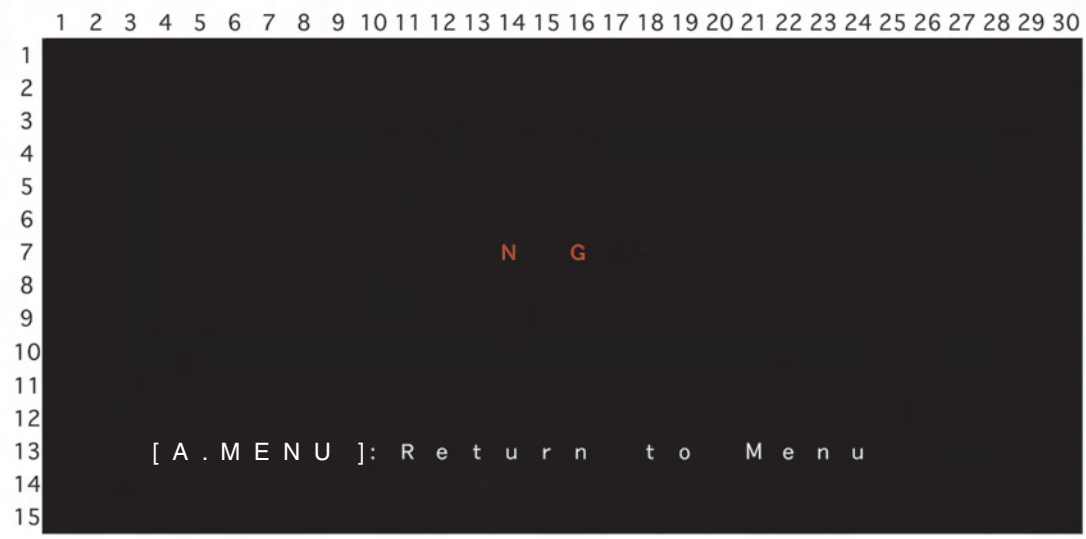

The data written is as follows.
Adjustment NG information.

[Key operation specifications]

Operational description	Remote controller key
To TOP menu	MENU_ENTER

2. Set up calibration

[Outline]

Touch the cursor [+] displayed on the screen. When correctly touched, the cursor will disappear, and the next cursor will appear. Calibration is conducted by repeating this process 16 times. When the 17th point has been finally touched, setting information for the 16 points and the normal ending information, total of 17 byte data, are written into the EEPROM, and the screen returns to the TOP menu.

In the following cases, however, NG will be displayed without storing the EEPROM captured value.

When the menu is exited before touching the 17th point.
However, 'adjustment NG information' (1 byte) is written into the EEPROM.
When writing into the EEPROM failed.

The transition of the state for the above described 16 points adjustment is outlined below.

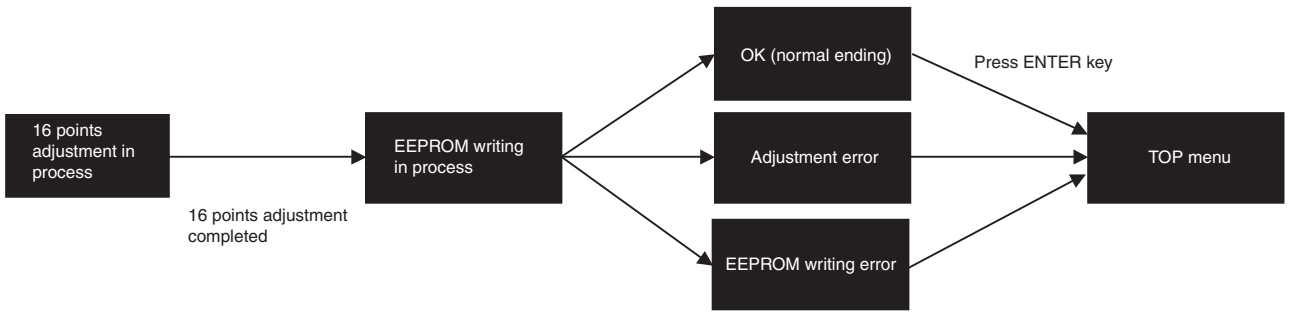

Refer to the material titled [Memory item list and EEPROM] for the stored area of the setting value in the EEPROM.

[Display specifications]

16 points adjustment in process

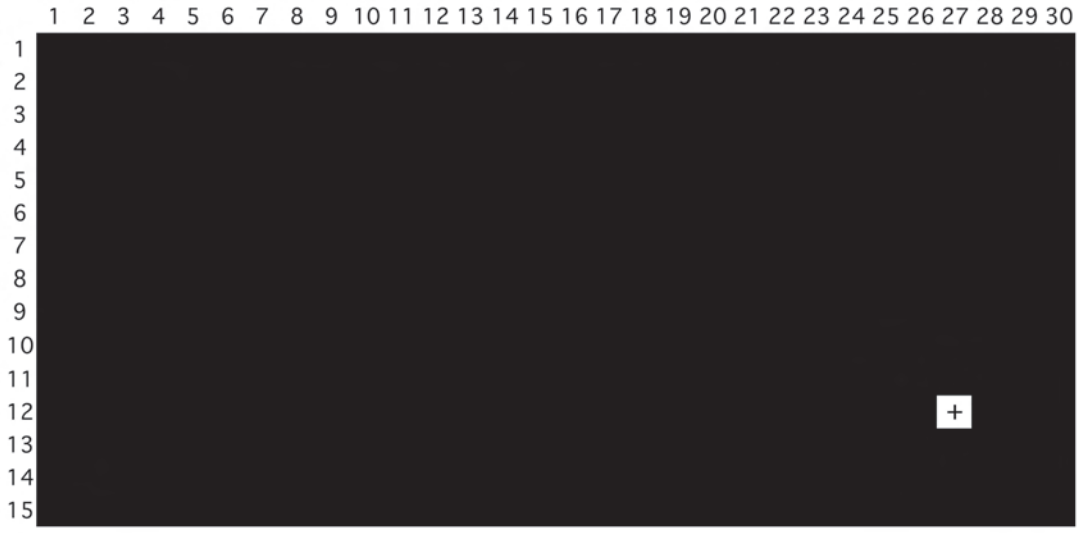

When ended normally.

The data written are as follows.
X coordinate (16 points)
Y coordinate (16 points)

[Key operation specifications]

Operational description	Remote controller key
To TOP menu	MENU_ENTER

3. TP coordinates test

[Outline]

Coordinate before and after the correction when the touch panel is touched is displayed, and the operation is verified.
Furthermore, the cursor can be moved by using the up/down/left/right keys, and the coordinate of the cursor center is displayed.
The cursor is displayed in red at the positions where the cursor was displayed during 16 points adjustment.

[Display specifications]

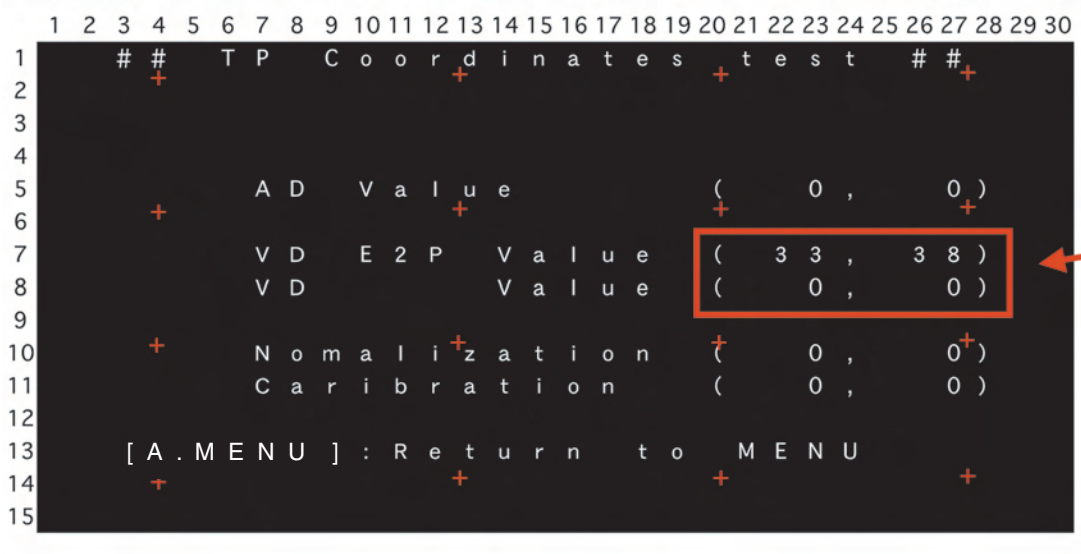

AD : AD data value (X direction, Y direction), representing the coordinate of the point pressed, is displayed.

VD E2P : VD value (the value registered at the time of circumference setting) preset in the EEPROM.
VD : VD value currently being pressed.

NORMAL : The coordinate (X direction, Y direction), which is the result of normalizing the AD data value currently being pressed within the effective range, is displayed.

CALIBRATION : The coordinate (X direction, Y direction), which is the result of applying the correction by calibration to the normalized coordinate, is displayed.

[Key operation specifications]

Operational description	Remote controller key
To TOP menu	MENU_ENTER
Cursor upward movement	↑
Cursor downward movement	↓
Cursor leftward movement	←
Cursor rightward movement	→

[Calibration verification]

[Outline]

■ Touch the center of the "+" cursor displayed on the screen. When touched correctly, the cursor will disappear, and the next cursor will be displayed.
By repeating this 16 times, corrected value for each "+" point is obtained.
The information are written into the EEPROM as a data of 16 times. The screen will return to the top menu.

[Display specifications]

"+" changes into red when coordinates to touch are outside the range.

■ **When terminated normally. (After pressing the 16th point.)**

[Key operation specifications]

Operational description	Remote controller key
To top menu	MENU_ENTER

[Data initialization]

[Outline]

■ Result of outermost circumference inspection and of calibration inspection (corrected value) are returned to their initial values.
As for the initialized items, the initial values are written into the EEPROM and the adjustment information is cleared.

[Display specifications]

■ Conditions for the adjustment completion mark (*) to be lighted up.
(The mark will be lighted up if one of the multiple conditions is met.)
☐ Outermost circumference inspection
When the outermost circumference inspection of the calibration for line has been completed normally.
☐ 16 point adjustment
When the calibration inspection for line has been completed normally.
☐ User outermost circumference inspection
When the outermost circumference inspection of calibration for line has been completed normally.
(Because the writing is made to both the Factory region and the User region, **the user side will also be treated as adjusted.)**
When the outermost circumference inspection of the user calibration has been completed normally.
☐ User 16 point adjustment
When the calibration inspection for line has been completed normally.
(Because the writing is made to both the Factory region and the User region, **the user side will also be treated as adjusted.)**
When the calibration inspection of the user calibration has been completed normally.

■ Conditions for the adjustment completion mark (*) to go out.
(The mark will go out if one of the multiple conditions is met.)
☐ Outermost circumference inspection
When the above mentioned lighting conditions are not applicable.
When the adjusted value has been initialized (Data initialize).
When the EEPROM has been initialized.
☐ 16 point adjustment
When the above mentioned lighting conditions are not applicable.
When the adjusted value has been initialized (Data initialize).
When the EEPROM has been initialized.
☐ User outermost circumference inspection
When the above mentioned lighting conditions are not applicable.
When the adjusted value has been initialized (Data initialize).
When the EEPROM has been initialized.
☐ User 16 point adjustment
When the above mentioned lighting conditions are not applicable.
When the adjusted value has been initialized (Data initialize).
When the EEPROM has been initialized.

[Key operation specifications]

Operational description	Remote controller key
Determination of initializing item	BACK
Selected cursor up movement	↑
Selected cursor down movement	↓
To top menu	MENU_ENTER

9. EXPLODED VIEWS AND PARTS LIST

NOTES : • *Parts marked by " * " are generally unavailable because they are not in our Master Spare Parts List.*
• *The ⚠ mark found on some component parts indicates the importance of the safety factor of the part. Therefore, when replacing, be sure to use parts of identical designation.*
• *Screw adjacent to ▽ mark on the product are used for disassembly.*
• *For the applying amount of lubricants or glue, follow the instructions in this manual. (In the case of no amount instructions,apply as you think it appropriate.)*

9.1 PACKING

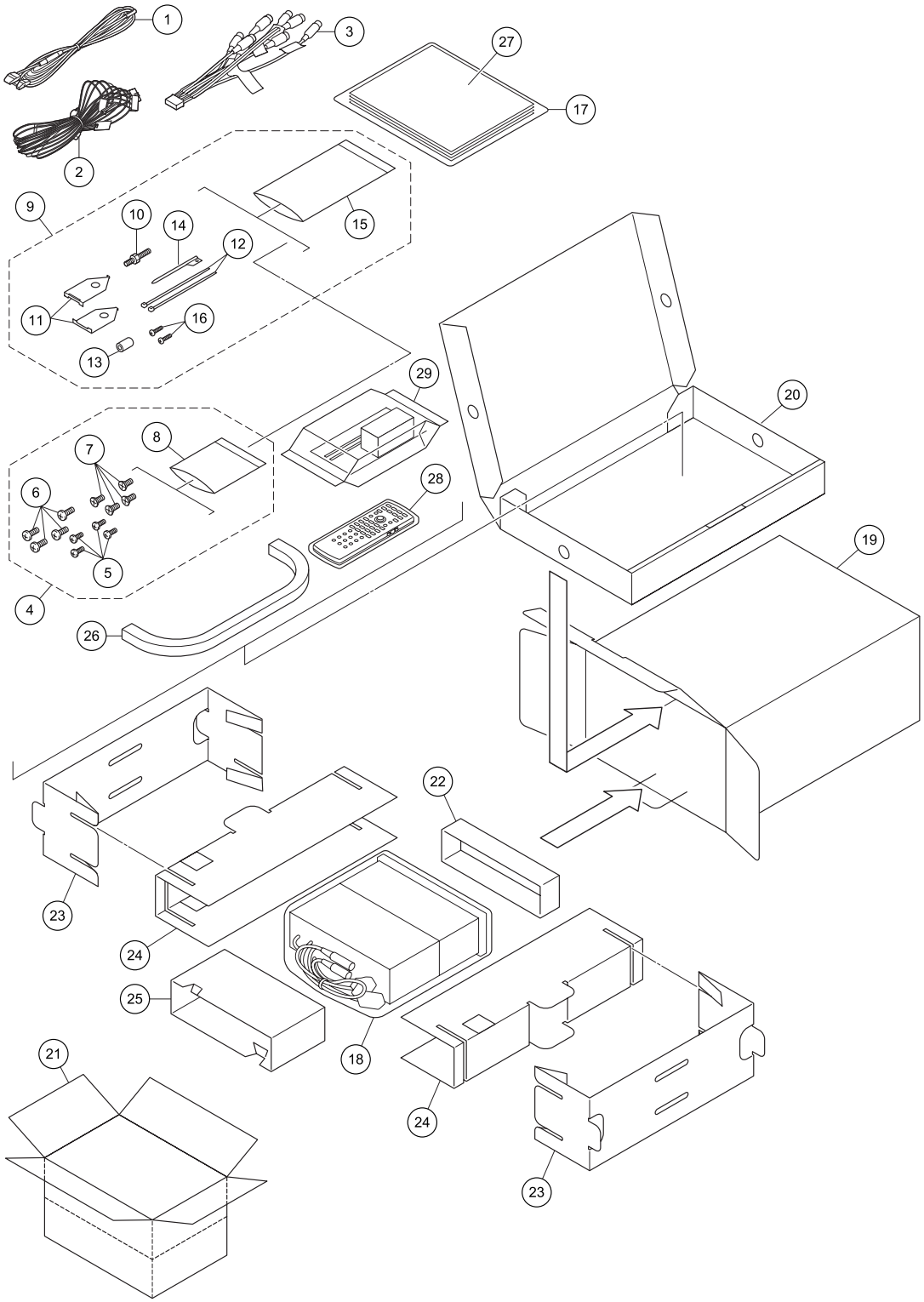

(1)PACKING SECTION PARTS LIST

Mark	No.	Description	Part No.
	1	Cord Assy	CDE7321
	2	Cord Assy	CDP1013
	3	Cord Assy	CDP1014
	4	Screw Assy	CEA5144
	5	Screw	BMZ50P060FTC
	6	Screw(M4 x 3)	CBA1870
	7	Screw	CMZ50P060FTC
*	8	Polyethylene Sheet	CNM4338
*	9	Accessory Assy	CEA7477
	10	Screw	CBA1650
	11	Bracket	CND4079
*	12	Lock Tie	CNV-754
	13	Bush	CNV3930
	14	Pen	CNV8969
*	15	Polyethylene Bag	E36-615
	16	Screw	JGZ20P070FTC
	17	Polyethylene Bag	CEG1116
	18	Polyethylene Bag	CEG1042
	19	Unit Box	See Contrast table(2)
	20	Sub Unit Box	CHG6195
	21	Contain Box	See Contrast table(2)
	22	Protector	CHP2540
	23	Protector	CHP3351
	24	Protector	CHP3352
	25	Protector	CHP3353
	26	Sheet	CNN1741
	27-1	Owner's Manual	CRB2366
	27-2	Owner's Manual	See Contrast table(2)
	27-3	Owner's Manual	See Contrast table(2)
	27-4	Installation Manual	See Contrast table(2)
	27-5	Caution Card	CRP1310
	28	Remote Control Unit	CXC6317
	29	Optical Terminal Conversion Assy	See Contrast table(2)

(2) CONTRAST TABLE

AVH-P5950DVD/XN/RC, AVH-P5950DVD/XN/RD and AVH-P5950DVD/XN/RI are constructed the same except for the following:

Mark	No.	Description	AVH-P5950DVD/XN/RC	AVH-P5950DVD/XN/RD	AVH-P5950DVD/XN/RI
	19	Unit Box	CHG6191	CHG6192	CHG6194
	21	Contain Box	CHL6191	CHL6192	CHL6194
	27-2	Owner's Manual	CRB2367	CRB2369	CRB2371
	27-3	Owner's Manual	CRB2368	CRB2370	Not used
	27-4	Installation Manual	CRD4215	CRD4216	CRD4217
	29	Optical Terminal Conversion Assy	CXC3584	CXC3584	Not used

Owner's Manual,Installation Manual

Part No.	Language
CRB2366	English
CRB2367	Traditional Chinese
CRB2368	Korean
CRB2369	Spanish
CRB2370	Portuguese(B)
CRB2371	Arabic
CRD4215	English, Traditional Chinese, Korean
CRD4216	English, Spanish, Portuguese(B)
CRD4217	English, Arabic

9.2 EXTERIOR(1)

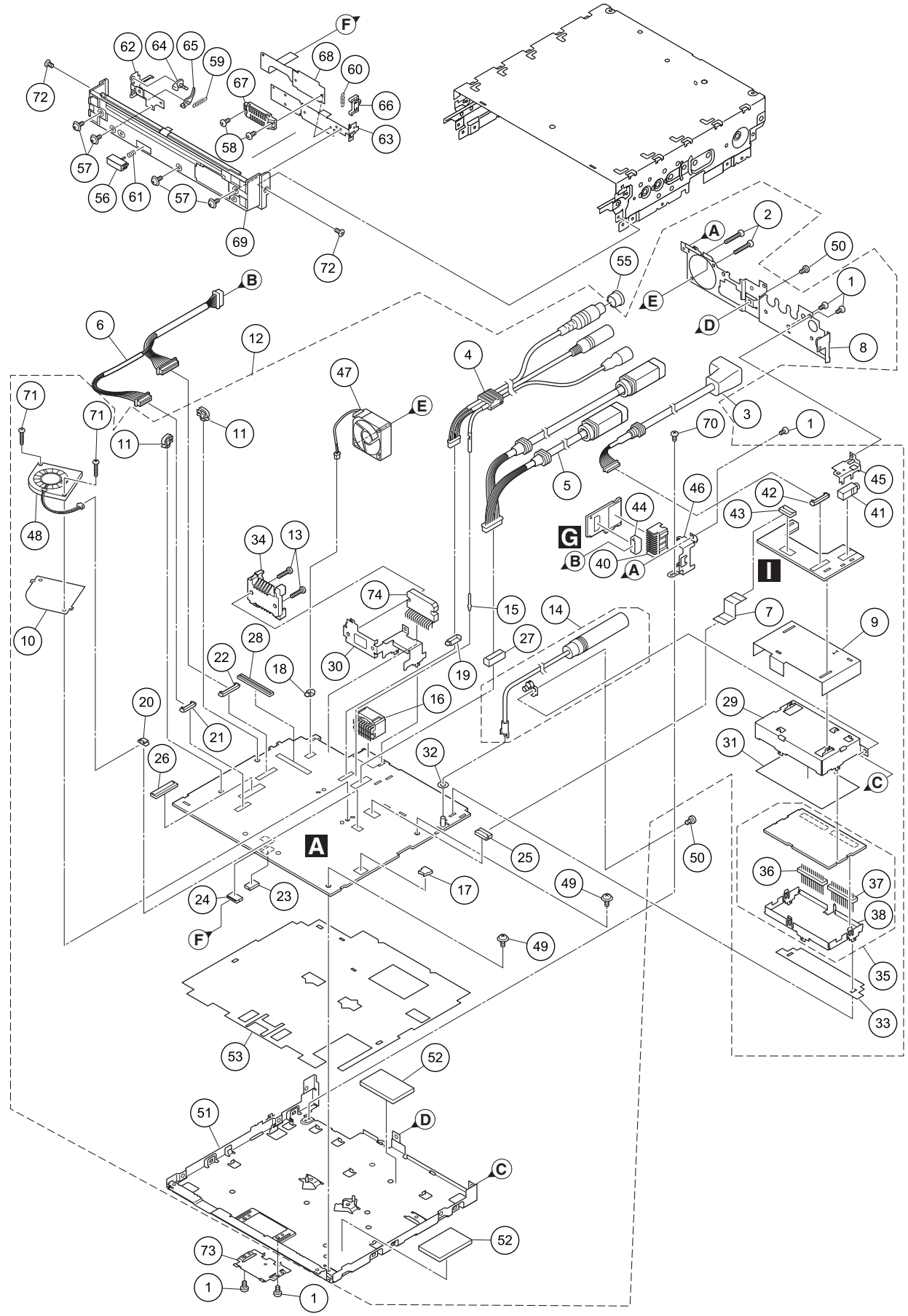

(1)EXTERIOR(1) SECTION PARTS LIST

Mark	No.	Description	Part No.
	1	Screw	BMZ20P030FTB
	2	Screw	BMZ20P160FTC
	3	Cord Assy	CDE8381
	4	Cord Assy	CDE8382
	5	Cord Assy	CDE8383
	6	Cord Assy	CDE8385
	7	Flat Cable	CDE8386
	8	Panel	CNB3383
	9	Insulator	CNN1578
	10	Insulator	CNN1737
	11	Clamper	CNV9670
	12	DVD Amp Assy	See Contrast table(2)
	13	Screw	BMZ26P120FTC
	14	Antenna Cable	CDH1362
	15	Terminal(CN762)	CKF-047
	16	Plug(CN761)	CKM1516
	17	Connector(CN462)	CKS4817
	18	Connector(CN951)	CKS4822
	19	Connector(CN381)	CKS4827
	20	Connector(CN961)	CKS4977
	21	Connector(CN391)	CKS4983
	22	Connector(CN311)	CKS4987
	23	Connector(CN531)	CKS5036
	24	Connector(CN481)	CKS5038
	25	Connector(CN461)	CKS5041
	26	Connector(CN541)	CKS5100
	27	Connector(CN351)	CKS5529
	28	Connector(CN512)	CKS5722
	29	Holder	CND3847
	30	Holder	CND3848
	31	Insulator	CNM9521
	32	Spacer	CNN1909
	33	Spacer	CNM9523
	34	Heat Sink	CNR1906
	35	FM/AM Tuner Unit	CWE2046
	36	Connector(CN101)	CKS4653
	37	Connector(CN102)	CKS4653
	38	Holder	CND1432
	39	•••••	
	40	Connector(CN4301)	CKM1506
	41	Jack(CN4203)	CKN1022
	42	Connector(CN4202)	CKS4985
	43	Connector(CN4201)	CKS5041
	44	Connector(CN4302)	CKS5270
	45	Holder	CND3849
	46	Holder	CND3996
	47	Fan Motor	CXM1262
	48	Fan Motor	CXM1276
	49	Screw	AMZ26P040FTC
	50	Screw	BMZ26P030FTC
	51	Case	CNB3384
	52	Sheet	CNM8228
	53	Insulator	CNN1575
	54	•••••	
	55	Cap	CNV6727
	56	Button	CAI1460
	57	Screw(M2 x 3)	CBA2078
	58	Screw(M2 x 3)	CBA2079
	59	Spring	CBH2681
	60	Spring	CBH2682
	61	Spring	CBH2683
	62	Holder	CND3852
	63	Holder	CND3853
	64	Arm	CNV8571
	65	Arm	CNV8572
	66	Arm	CNV8573
	67	Connector	CKS4658
	68	Flexible PCB	CNP9973
	69	Panel Unit	CXC7633
	70	Screw	JGZ20P020FTB
	71	Screw(M2 x 8)	CBA1752
	72	Screw(M2 x 3)	CBA1877
	73	Holder	CND4167
	74	IC(IC331)	PAL007C

(2) CONTRAST TABLE

AVH-P5950DVD/XN/RC, AVH-P5950DVD/XN/RD and AVH-P5950DVD/XN/RI are constructed the same except for the following:

Mark	No.	Description	AVH-P5950DVD/XN/RC	AVH-P5950DVD/XN/RD	AVH-P5950DVD/XN/RI
	12	DVD Amp Assy	CXC7509	CXC7510	CXC7511

9.3 EXTERIOR(2)

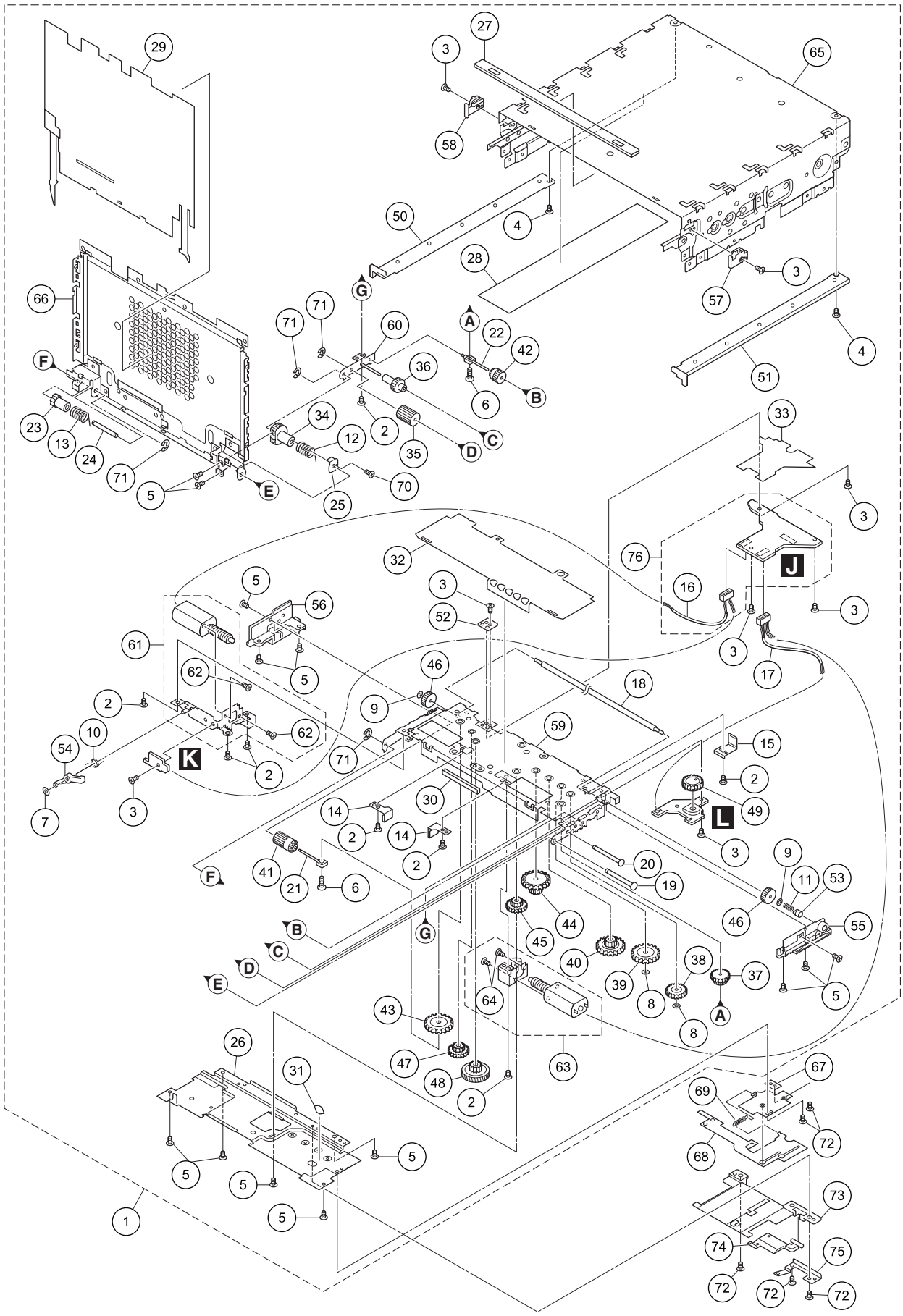

EXTERIOR(2) SECTION PARTS LIST

Mark	No.	Description	Part No.
	1	Drive Unit	CXC7637
	2	Screw(M2 x 2)	CBA1608
	3	Screw(M2 x 1.5)	CBA1615
	4	Screw(M2 x 2)	CBA1872
	5	Screw(M2 x 3)	CBA1877
	6	Screw(M2.3 x 6)	CBA2027
	7	Washer	CBF1037
	8	Washer	CBF1039
	9	Washer	CBF1064
	10	Spring	CBH2906
	11	Spring	CBH2907
	12	Spring	CBH2908
	13	Spring	CBH2909
	14	Spring	CBL1723
	15	Spring	CBL1734
	16	Cord	CDE8127
	17	Cord	CDE8128
	18	Shaft	CLA4651
	19	Shaft	CLA4661
	20	Shaft	CLA4662
	21	Shaft	CLA4663
	22	Shaft	CLA4664
	23	Shaft	CLA4665
	24	Shaft	CLA4666
	25	Holder	CND3245
	26	Cover	CND3252
	27	Sheet	CNN1055
	28	Sheet	CNN1056
*	29	Insulator	CNN1583
	30	Sheet	CNN1065
	31	Insulator	CNN1068
*	32	Sheet	CNN1349
	33	Insulator	CNN1058
	34	Gear	CNR1855
	35	Gear	CNR1856
	36	Gear	CNR1857
	37	Gear	CNR1859
	38	Gear	CNR1860
	39	Gear	CNR1861
	40	Gear	CNR1862
	41	Gear	CNR1864
	42	Gear	CNR1925
	43	Gear	CNR1926
	44	Gear	CNV8980
	45	Gear	CNV8981
	46	Gear	CNV8983
	47	Gear	CNV8984
	48	Gear	CNV8985
	49	Gear	CNV8987
	50	Rack	CNV8995
	51	Rack	CNV8996
	52	Guide	CNV8999
	53	Lever	CNV9000
	54	Arm	CNV9001
*	55	Guide	CNV9534
*	56	Guide	CNV9535
	57	Guide	CNV9003
	58	Guide	CNV9004
	59	Frame Unit	CXC6143
	60	Holder Unit	CXC6145
	61	Motor Unit	CXC6638
	62	Screw	JGZ20P025FTC
	63	Motor Unit	CXC6639
	64	Screw	JGZ20P025FTC
*	65	Chassis Unit	CXC7638
*	66	Case Unit	CXC7640
	67	Bracket Unit	CXC7978
	68	Lever	CND4077
	69	Spring	CBH2750
	70	Screw	JFZ17P025FTC
	71	Washer	YE15FTC
	72	Screw(M2 x 3)	CBA1877
	73	Cover	CNV9643
	74	Arm	CNV9644
	75	Spring	CBL1766
	76	Main PCB Unit(SERVICE)	CXX2316

The gear assembly figure of the Drive Unit

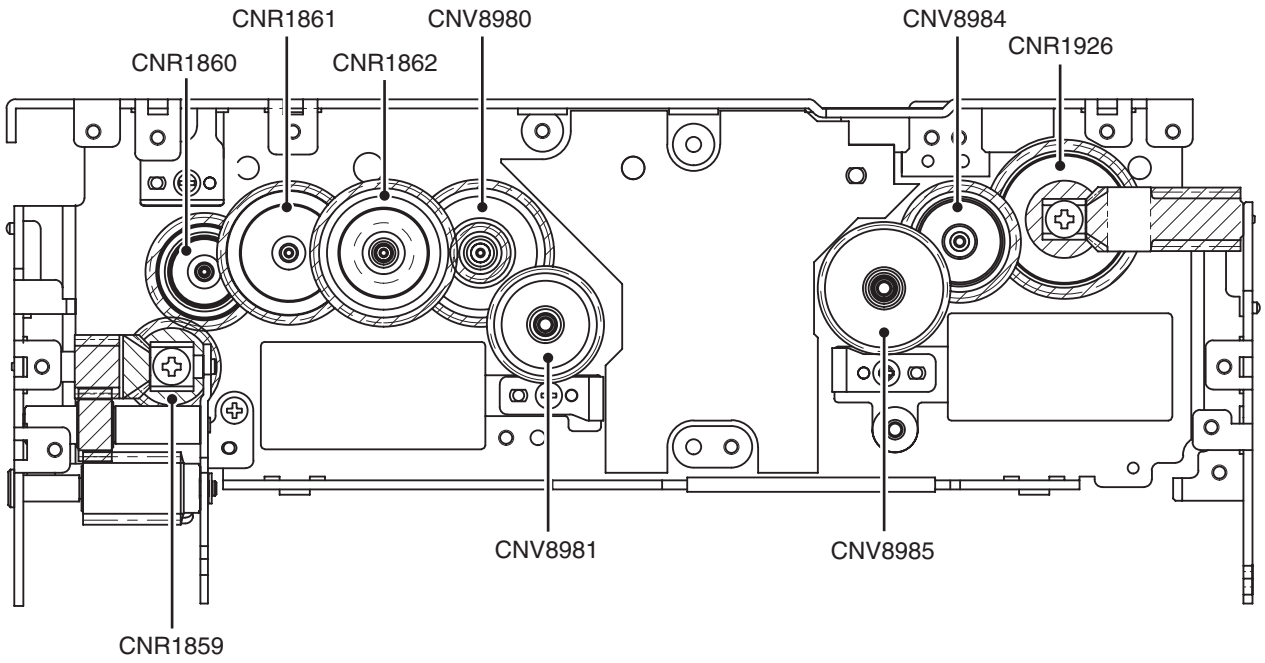

Grease

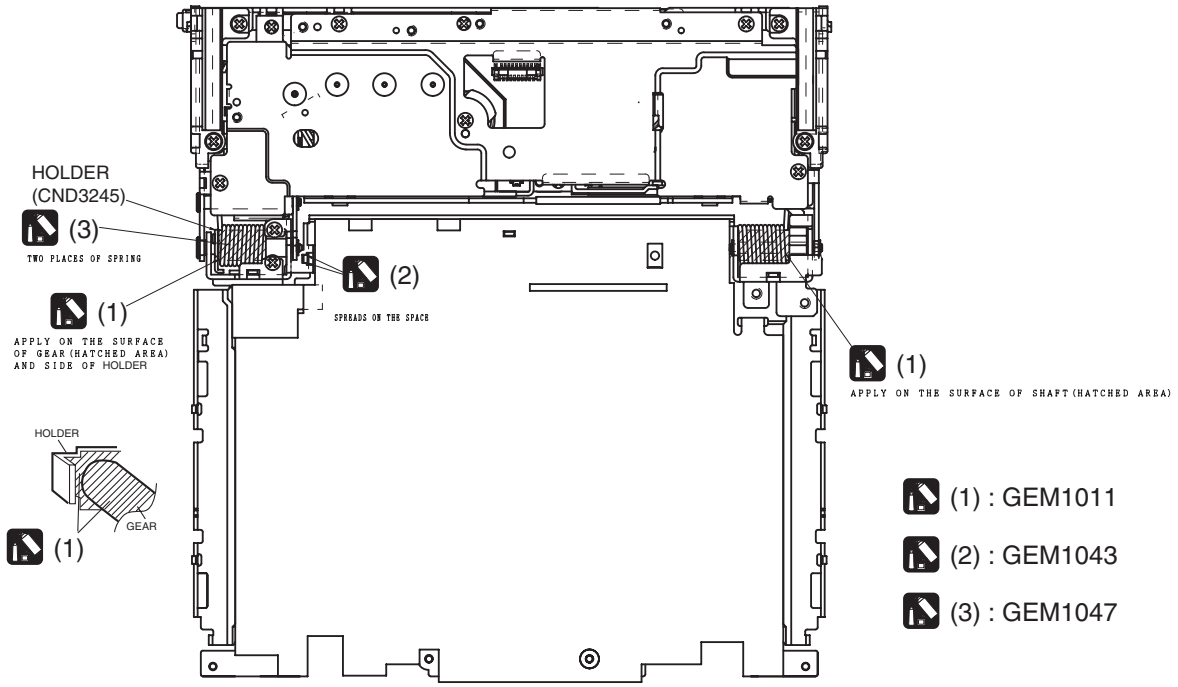

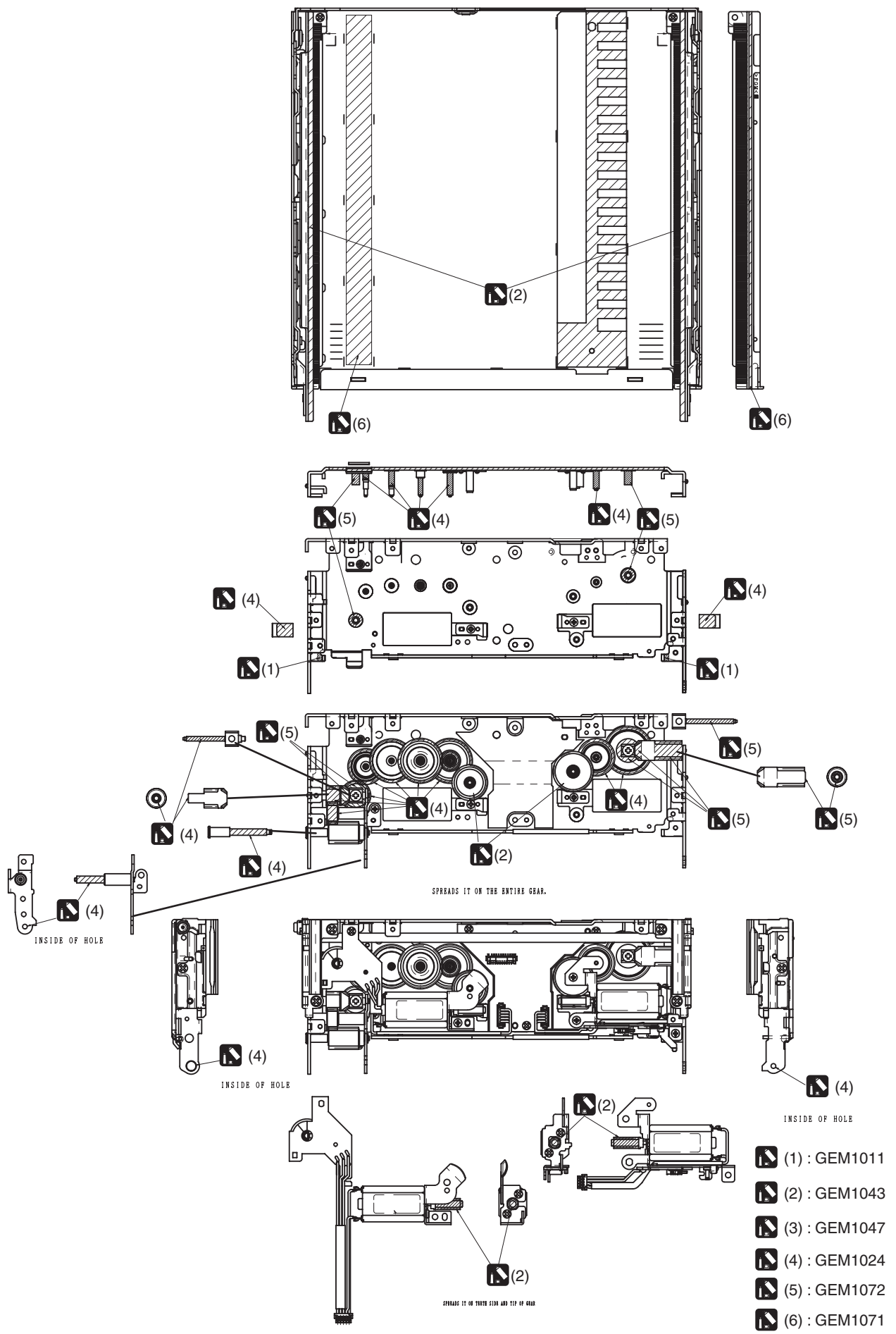
(2)
(6)
(6)
(5)
(4)
(4)
(5)
(4)
(4)
(1)
(1)
(5)
(5)
(4)
(4)
(5)
(5)
(4)
(4)
(2)
SPREADS IT ON THE ENTIRE GEAR.
(4)
INSIDE OF HOLE
(4)
INSIDE OF HOLE
(4)
INSIDE OF HOLE
(2)
(2)
SPREADS IT ON TOOTH SIDE AND TIP OF GEAR
(1) : GEM1011
(2) : GEM1043
(3) : GEM1047
(4) : GEM1024
(5) : GEM1072
(6) : GEM1071

9.4 EXTERIOR(3)

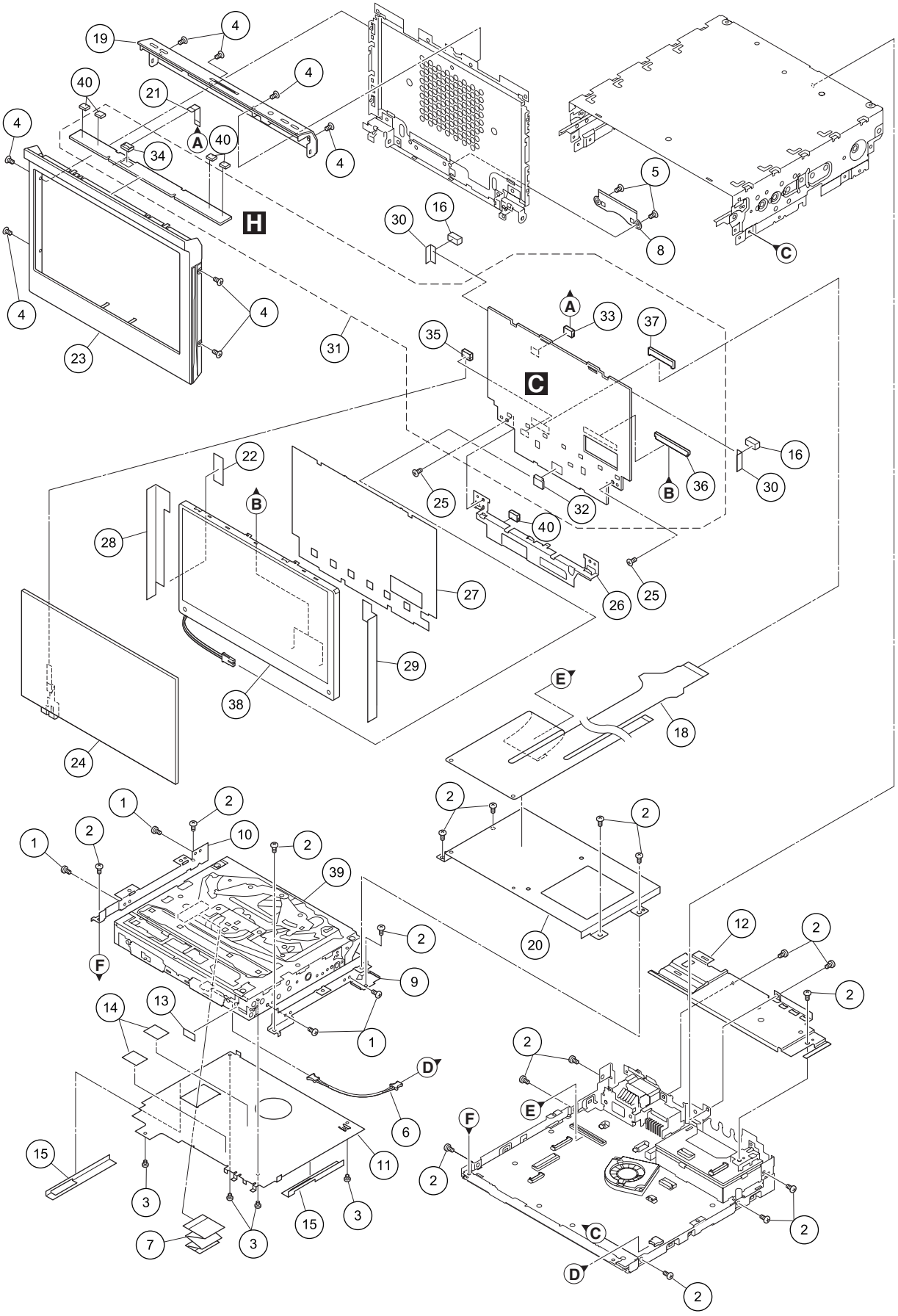

EXTERIOR(3) SECTION PARTS LIST

Mark	No.	Description	Part No.
	1	Screw	BMZ20P025FTC
	2	Screw	BMZ26P030FTC
	3	Screw(M2 x 1.4)	CBA1593
	4	Screw(M2 x 2)	CBA1872
	5	Screw(M2 x 1.4)	CBA2042
	6	Cord	CDE8384
	7	Flat Cable	CDE8469
	8	Holder	CND3271
	9	Bracket	CND3842
	10	Bracket	CND3843
	11	Bracket	CND3844
	12	Holder	CND3846
	13	Spacer	CNN1582
	14	Sheet	CNN1698
	15	Insulator	CNN1739
	16	Cushion	CNN1753
	17	•••••	
	18	Flexible PCB	CNQ1085
	19	Cover Unit	CXC7711
	20	Bracket	CND3845
	21	FFC	CDE8387
	22	Sheet	CNN1694
	23	Grille	CNS8975
	24	Touch Panel	CSX1115
	25	Screw(M2 x 2)	CBA1872
	26	Holder	CND3850
	27	Insulator	CNN1584
	28	Sheet	CNN1748
	29	Sheet	CNN1749
	30	Sheet	CNN1750
	31	Monitor Unit	CWN2330
	32	Connector(CN5201)	CKS4428
	33	Connector(CN5002)	CKS5035
	34	Connector(CN5901)	CKS5035
	35	Connector(CN5001)	CKS5105
	36	Connector(CN5501)	CKS5111
	37	Connector(CN5003)	CKS5637
	38	LCD Module	CWX3264
	39	DVD Mechanism Module(MS5AVCODE2)	CXK6631
	40	Sheet	CNN2026

9.5 EXTERIOR(4)

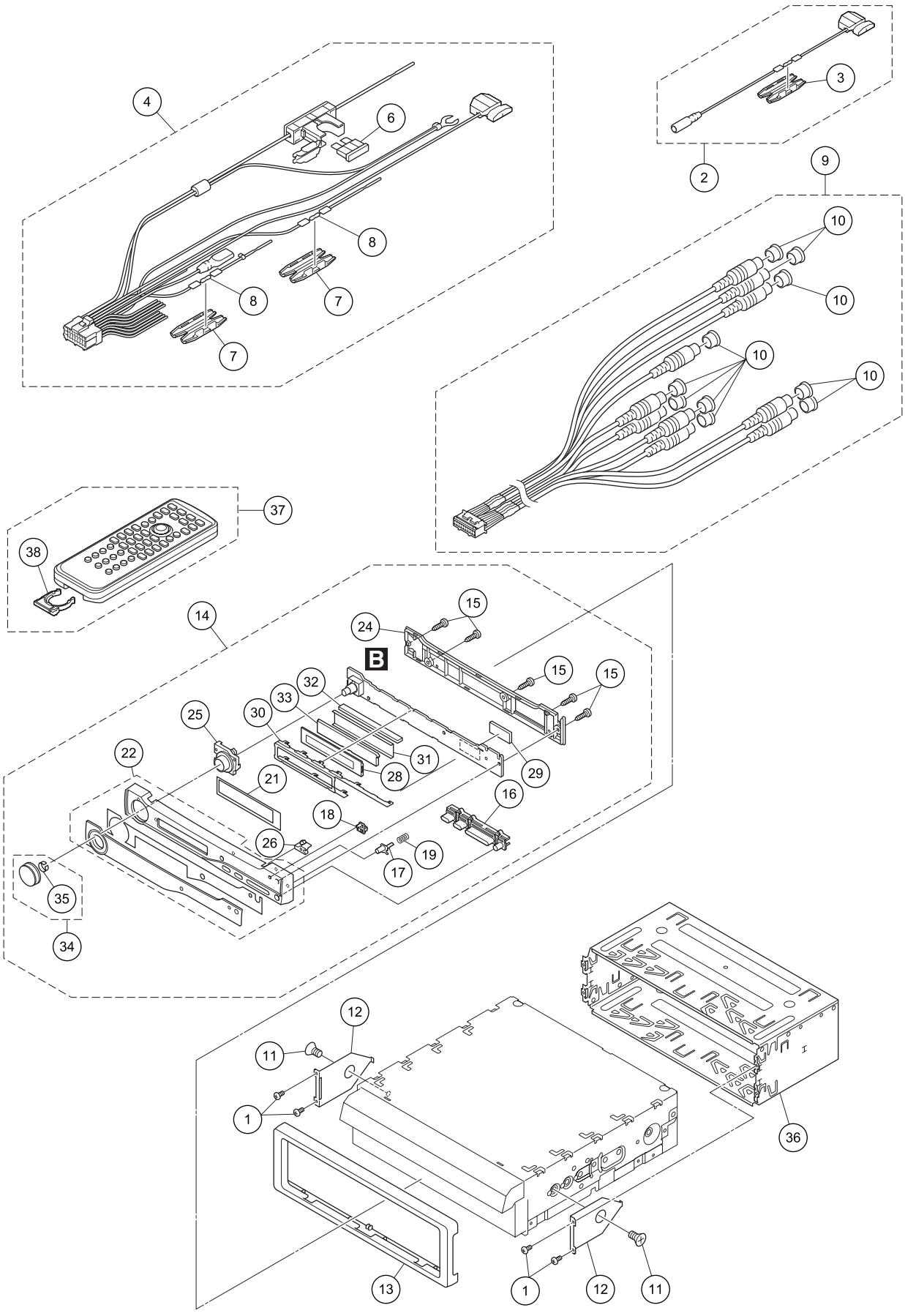

EXTERIOR(4) SECTION PARTS LIST

Mark	No.	Description	Part No.
	1	Screw	BMZ20P030FTB
	2	Cord Assy	CDE7321
	3	Cap	CNS1472
	4	Cord Assy	CDP1013
	5	•••••	
⚠	6	Fuse(10 A)	CEK1136
	7	Cap	CNS1472
	8	Resistor	RS1/2PMF102J
	9	Cord Assy	CDP1014
	10	Cap	CNV6727
	11	Screw	CMZ50P060FTC
	12	Bracket	CND3855
	13	Panel	CNS8978
	14	Grille Assy	CXC7521
	15	Screw	BPZ20P080FTB
	16	Button(BAND, SEEK)	CAI1175
	17	Button(DETACH)	CAI1176
	18	Button(RESET)	CAI1177
	19	Spring	CBH2680
	20	•••••	
	21	Sheet	CNN1587
	22	Grille Assy	CXC8814
	23	•••••	
	24	Cover	CNS8964
	25	Lighting Conductor	CNV9504
	26	Lighting Conductor	CNV9506
	27	•••••	
	28	LCD	CAW1946
	29	Connector(CN4001)	CKS4657
	30	Holder	CND3851
	31	Sheet	CNN1580
	32	Connector	CNV9502
	33	Lighting Conductor	CNV9503
	34	Knob Unit	CXC7631
	35	Spring	CBL1761
	36	Holder	CND3854
	37	Remote Control Unit	CXC6317
	38	Cover	CZN7062
	40	Cushion	CNN1887

9.6 DVD MECHANISM MODULE

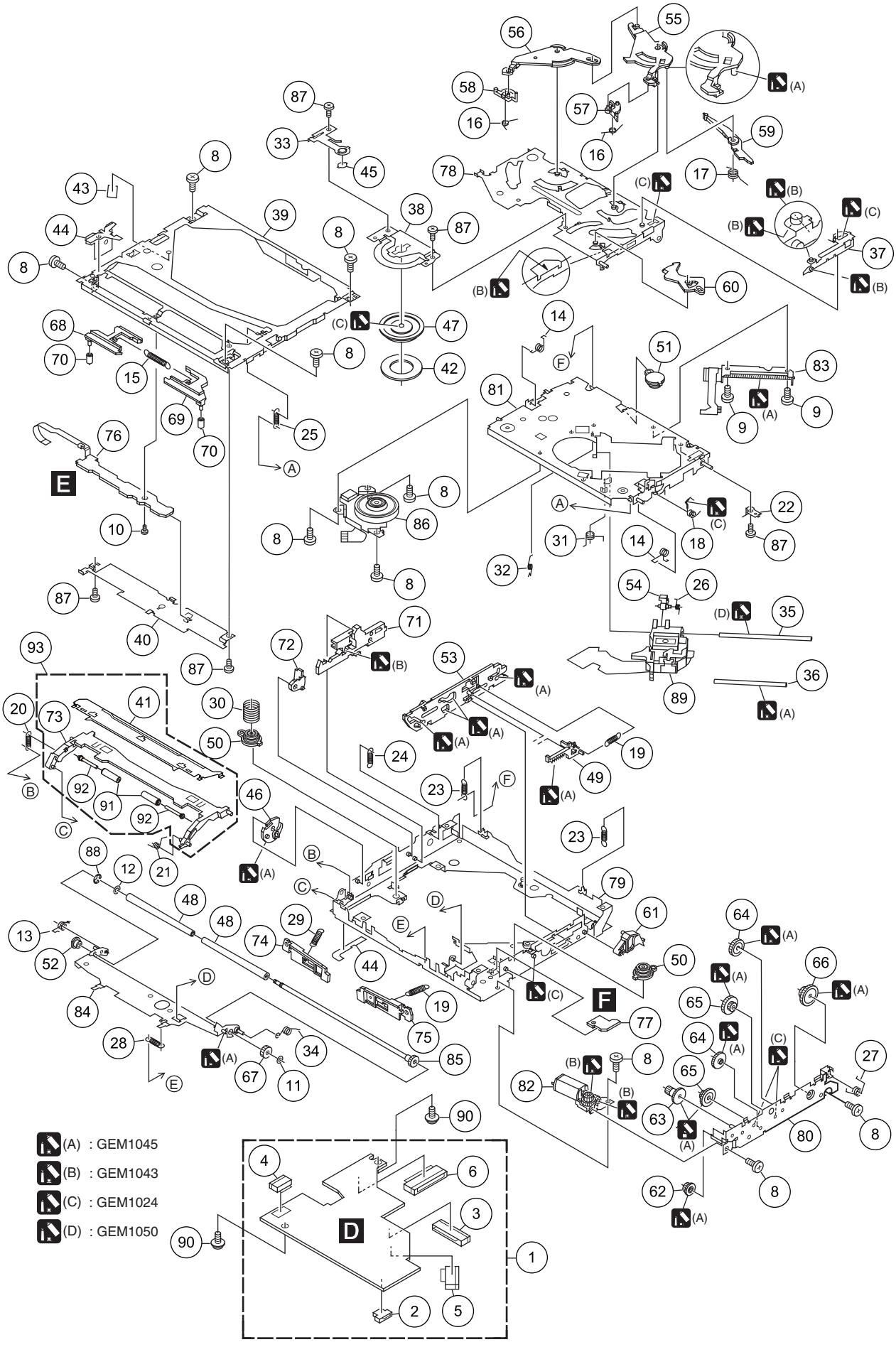

DVD MECHANISM MODULE SECTION PARTS LIST

Mark No.	Description	Part No.
1	DVD Core Unit	YWX5005
2	Connector(CN1852)	CKS4817
3	Connector(CN1101)	CKS4841
4	Connector(CN1301)	CKS5017
5	Connector(CN1201)	CKS5043
6	Connector(CN1901)	CKS5054
7	•••••	
8	Screw	BMZ20P020FTC
9	Screw	BMZ20P025FNI
10	Screw	CBA1787
11	Washer	CBF1038
12	Washer	CBF1064
13	Spring	CBH2586
14	Spring	CBH2588
15	Spring	CBH2589
16	Spring	CBH2590
17	Spring	CBH2591
18	Spring	CBH2592
19	Spring	CBH2593
20	Spring	CBH2596
21	Spring	CBH2597
22	Spring	CBL1726
23	Spring	CBH2599
24	Spring	CBH2600
25	Spring	CBH2601
26	Spring	CBH2926
27	Spring	CBH2604
28	Spring	CBH2605
29	Spring	CBH2710
30	Spring	CBH2711
31	Spring	CBH2935
32	Spring	CBH2890
33	Spring	CBL1689
34	Spring	CBH2898
35	Shaft	CLA4206
36	Shaft	CLA4701
37	Lever	CNC9933
38	Holder	CND2643
39	Frame	CND2250
40	Holder	CND2251
41	Holder	CND3936
42	Sheet	CNM6883
43	Sheet	CNM8697
44	Sheet	CNM9658
45	Sheet	CNM9407
46	Cam	CNV7156
47	Clamper	CNV7158
48	Roller	CNV7165
49	Rack	CNV7175
50	Damper	CNV9061
51	Damper	CNV9062
52	Collar	CNV8845
53	Lever	CNV8865
54	Rack	CNV9063
55	Arm	CNV8867
56	Arm	CNV8868
57	Arm	CNV9577
58	Arm	CNV8870
59	Arm	CNV8871
60	Arm	CNV8872
61	Arm	CNV8873
62	Gear	CNV8874
63	Gear	CNV8875
64	Gear	CNV8876
65	Gear	CNV8877
66	Gear	CNV8878
67	Gear	CNV8879
68	Lever	CNV8903
69	Lever	CNV8904
70	Roller	CNV8905
71	Lever	CNV8908
72	Arm	CNV8909
73	Guide	CNV9569
74	Arm	CNV9116
75	Arm	CNV9117
76	Compound Unit(A)	CWX3154
77	Compound Unit(B)	CWX3394
78	Arm Unit	CXC7872
79	Frame Unit	CXC6442
80	Bracket Unit	CXB8685
81	Chassis Unit	CXC6443
82	Motor Unit(LOAD)(M1)	CXC4912
83	Motor(STEPPING)(M2)	CXM1364
84	Arm Unit	CXC5486
85	Roller Unit	CXC5708
86	Motor(SPDL)(M3)	CXM1362
87	Screw	JFZ20P018FTC
88	Washer	YE20FTC
89	Pickup Unit(Service)	CXX2118
90	Screw	IMS20P030FTC
91	Collar	CNV9570
92	Shaft	CLA4771
93	Guide Unit	CXC8572

10. SCHEMATIC DIAGRAM

10.1 MOTHER UNIT(SYSTEM PART)(GUIDE PAGE)

Note: When ordering service parts, be sure to refer to " EXPLODED VIEWS AND PARTS LIST" or "ELECTRICAL PARTS LIST".

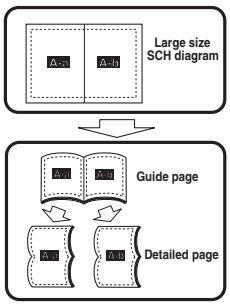

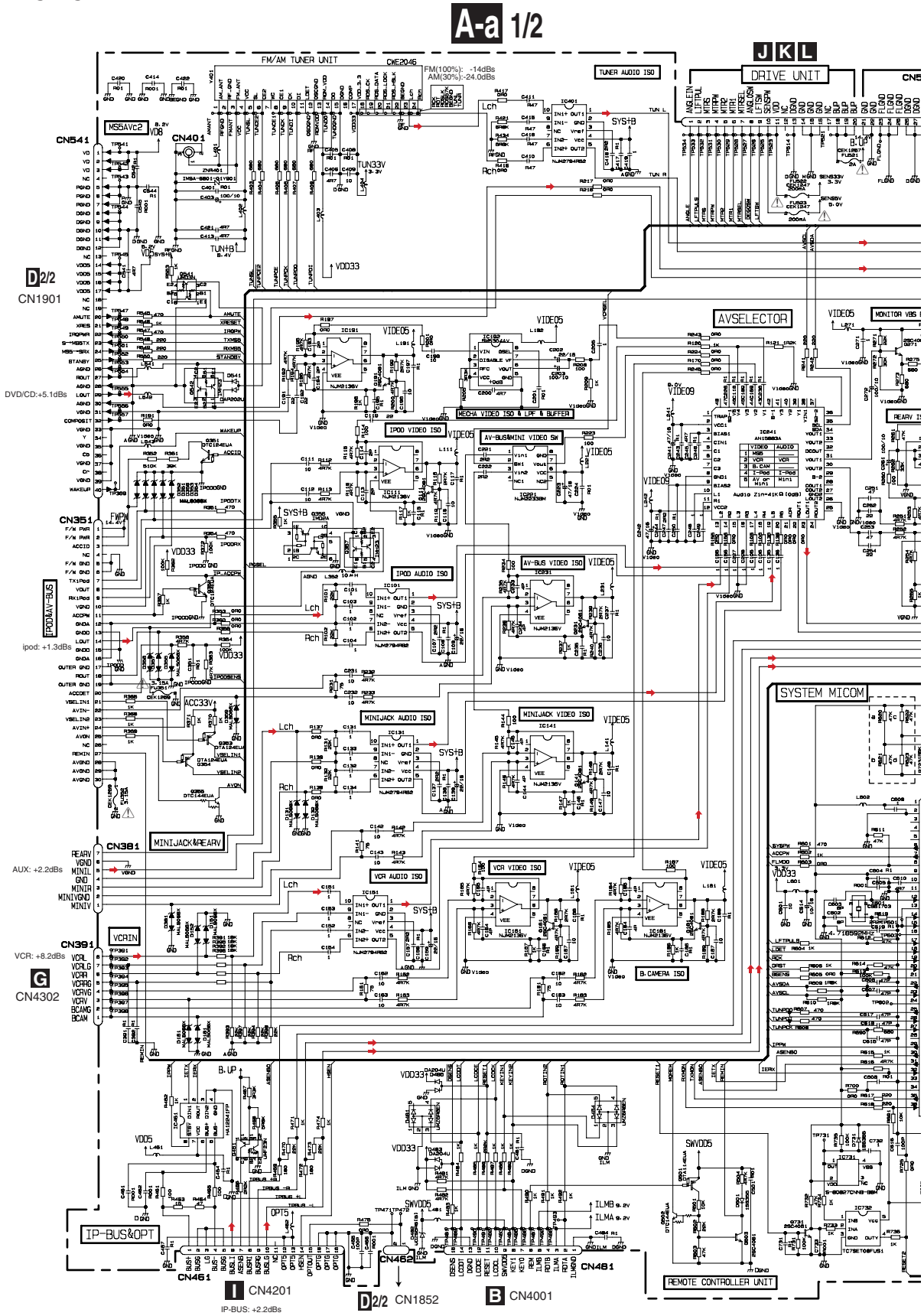

A 1/2

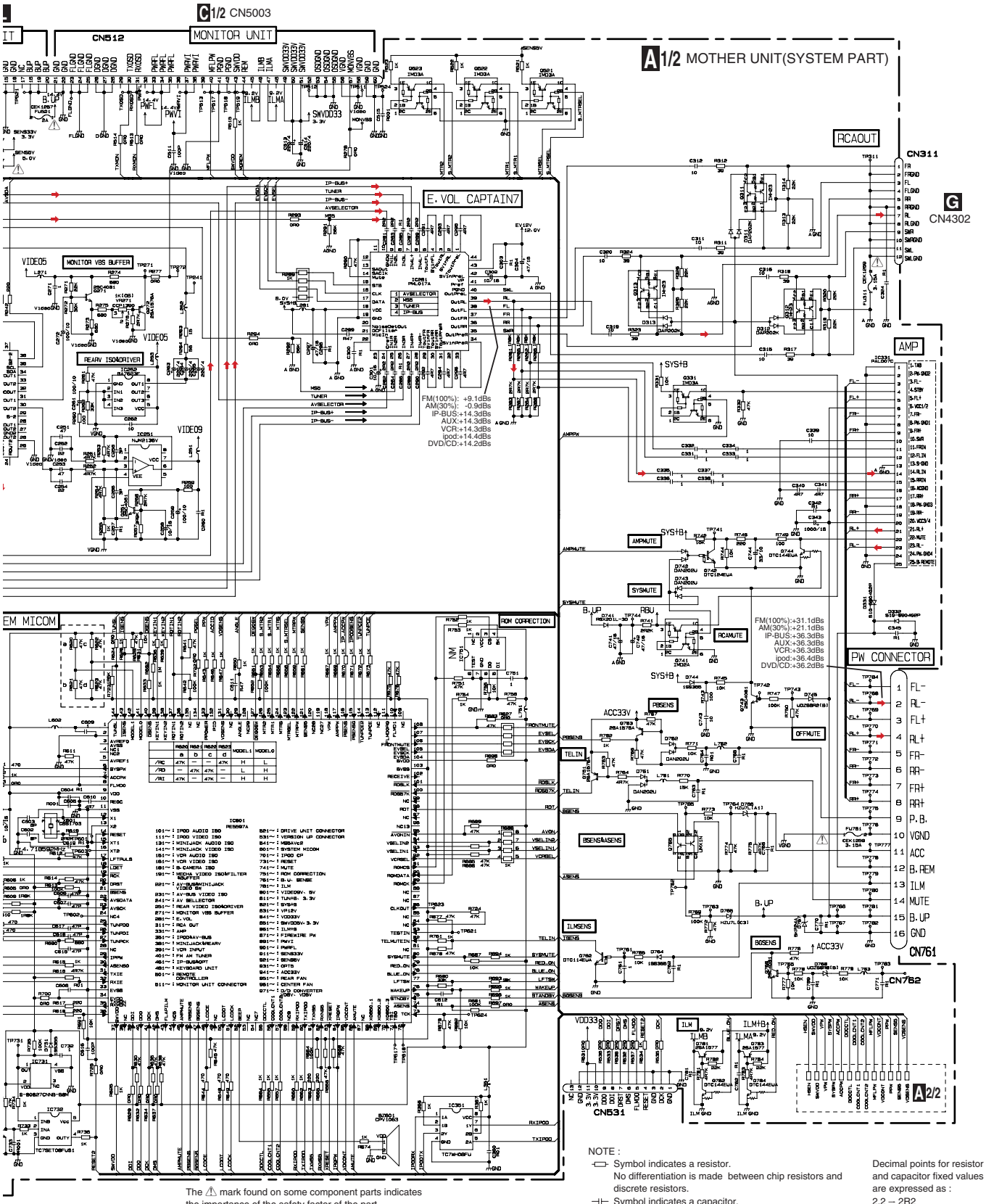

The ⚠ mark found on some component parts indicates the importance of the safety factor of the part. Therefore, when replacing, be sure to use parts of identical designation.

NOTE :
- Symbol indicates a resistor. No differentiation is made between chip resistors and discrete resistors.
- Symbol indicates a capacitor. No differentiation is made between chip capacitors and discrete capacitors.

Decimal points for resistor and capacitor fixed values are expressed as :
2.2 → 2R2
0.022 → R022

C 1/2 CN5003

MONITOR UNIT

CN512

A 1/2 MOTHER UNIT(SYSTEM PART)

RCAOUT

CN311

G CN4302

AVH-P5950DVD/XN/RC

E. VOL CAPTAIN7

MONITOR VBS BUFFER

REARV ISO&DRIVER

VIDEO5

VIDEO9

AMP

ROM CORRECTION

AMPMUTE

SYSMUTE

FM(100%): +9.1dBs
AM(30%): -0.9dBs
IP-BUS:+14.3dBs
AUX:+14.3dBs
VCR:+14.3dBs
ipod:+14.4dBs
DVD/CD:+14.2dBs

FM(100%):+31.1dBs
AM(30%):+21.1dBs

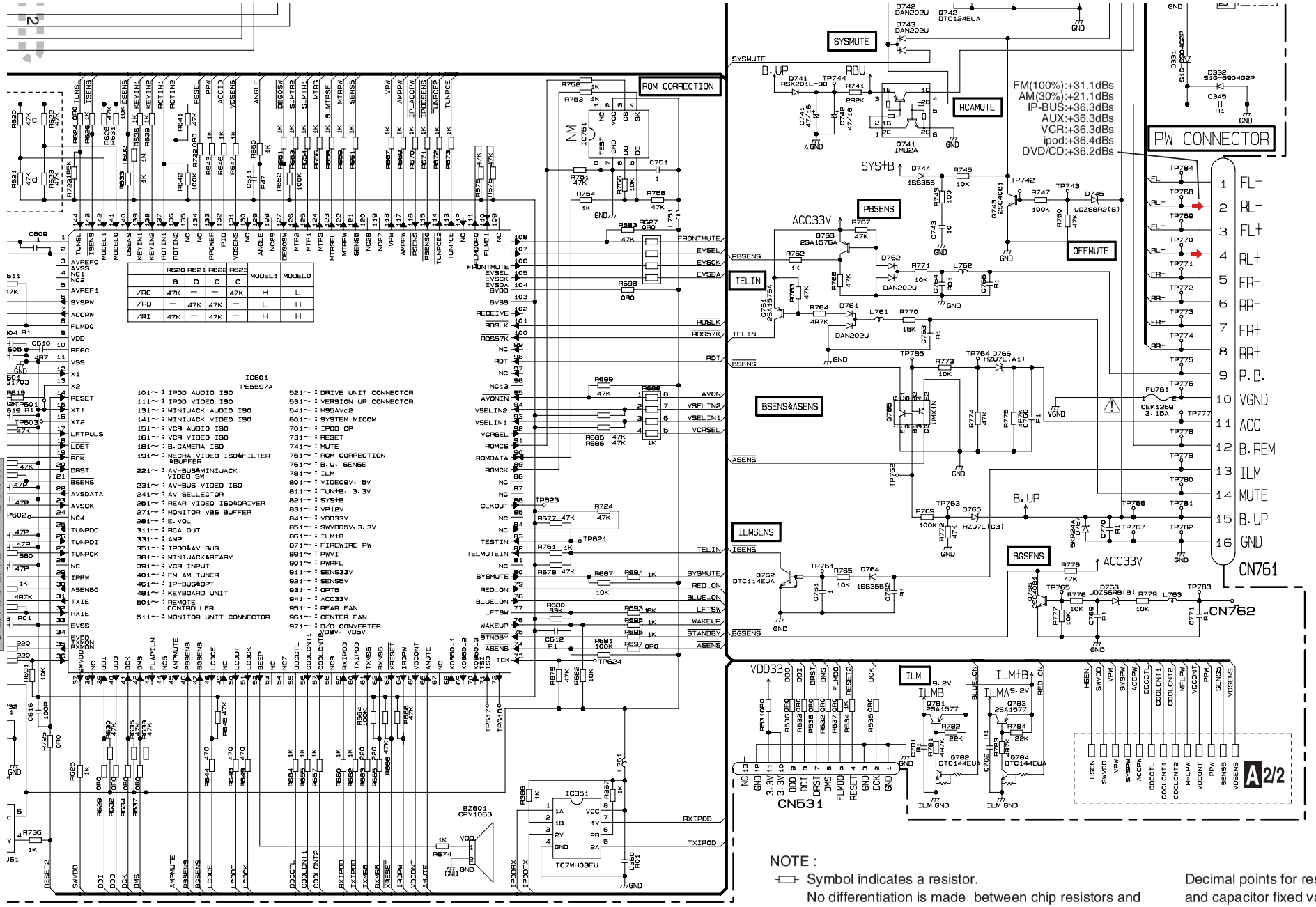

	R620 a	R621 b	R622 c	R623 d	MODEL1	MODEL0
/RC	47K	—	—	47K	H	L
/RD	—	47K	47K	—	L	H
/RI	47K	—	47K	—	H	H

101~ : IPOD AUDIO ISO
111~ : IPOD VIDEO ISO
131~ : MINIJACK AUDIO ISO
141~ : MINIJACK VIDEO ISO
151~ : VCR AUDIO ISO
161~ : VCR VIDEO ISO
181~ : B.CAMERA ISO
191~ : MECHA VIDEO ISO&FILTER &BUFFER
221~ : AV-BUS&MINIJACK VIDEO SW
231~ : AV-BUS VIDEO ISO
241~ : AV SELLECTOR
251~ : REAR VIDEO ISO&DRIVER
271~ : MONITOR VBS BUFFER
281~ : E.VOL
311~ : RCA OUT
331~ : AMP
351~ : IPOD&AV-BUS
361~ : MINIJACK&REARV
391~ : VCR INPUT
401~ : FM AM TUNER
461~ : IP-BUS&OPT
481~ : KEYBOARD UNIT
501~ : REMOTE CONTROLLER
511~ : MONITOR UNIT CONNECTOR
521~ : DRIVE UNIT CONNECTOR
531~ : VERSION UP CONNECTOR
541~ : MSSAVC2
601~ : SYSTEM MICOM
701~ : IPOD CP
731~ : RESET
741~ : MUTE
751~ : ROM CORRECTION
761~ : B.U. SENSE
781~ : ILM
801~ : VIDE09V, 5V
811~ : TUNER 3.3V
821~ : SYS+B
831~ : VP12V
841~ : VDD33V
851~ : SWVDD5V-3.3V
861~ : ILM+B
871~ : FIREWIRE PW
891~ : PWVI
901~ : PWRFL
911~ : SENS33V
921~ : SENS5V
931~ : OPT5
941~ : ACC33V
951~ : REAR FAN
961~ : CENTER FAN
971~ : D/D CONVERTER 2.5V, VD5V

The ⚠ mark found on some component parts indicates the importance of the safety factor of the part. Therefore, when replacing, be sure to use parts of identical designation.

NOTE :

- Symbol indicates a resistor. No differentiation is made between chip resistors and discrete resistors.
- Symbol indicates a capacitor. No differentiation is made between chip capacitors and discrete capacitors.

Decimal points for resistor and capacitor fixed values are expressed as :
2.2 → 2R2
0.022 → R022

A-a A-b

A-b 1/2

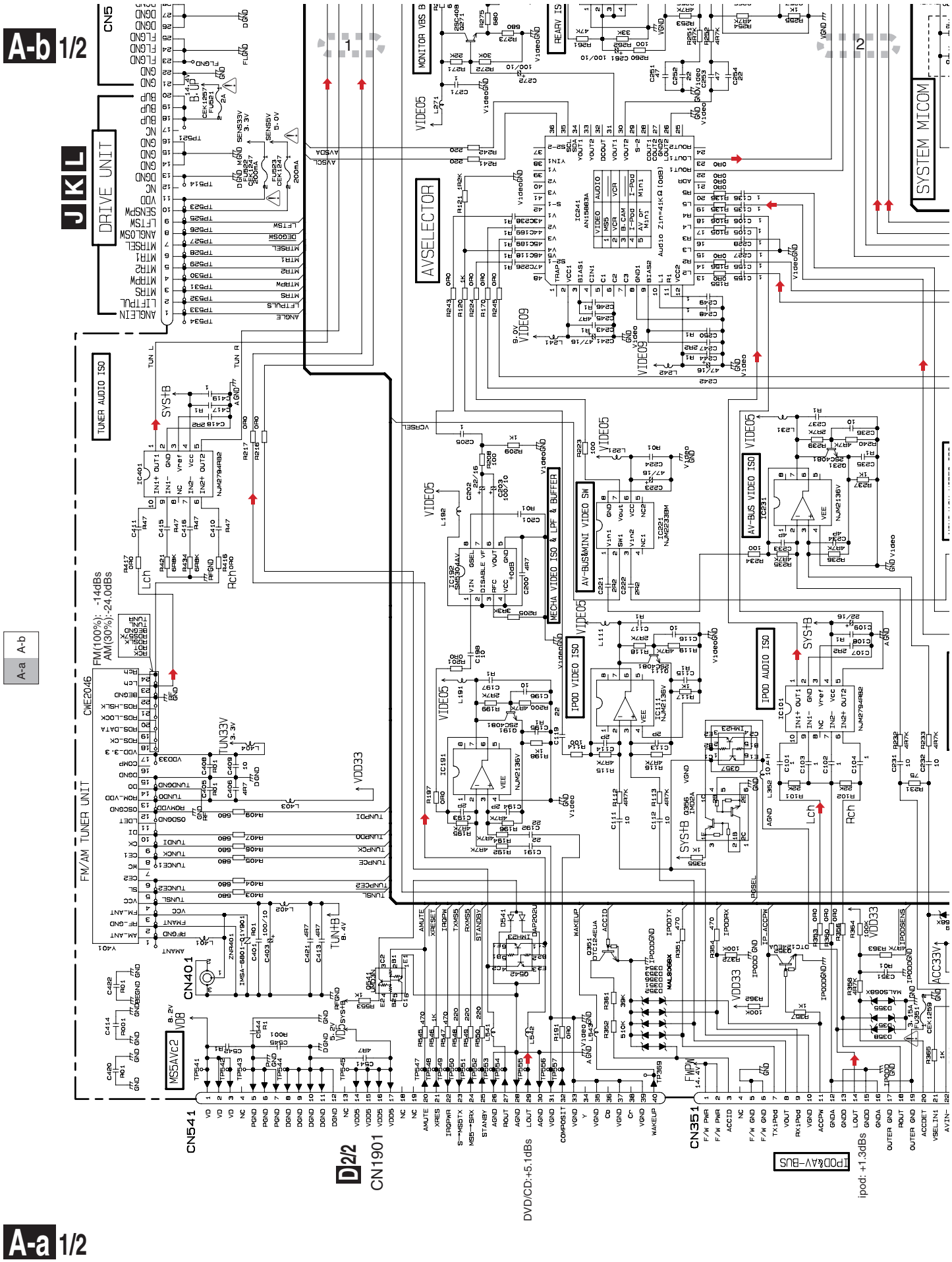
A-b 1/2
J K L
DRIVE UNIT
CN5
TUNER AUDIO ISO
FM/AM TUNER UNIT
CWE2046
AVSELECTOR
SYSTEM MICOM
MONITOR VBS B
REAR IS
MECHA VIDEO ISO & LPF & BUFFER
AV-BUS&MINI VIDEO SW
AV-BUS VIDEO ISO
IPOD VIDEO ISO
IPOD AUDIO ISO
FM(100%): -14dBs
AM(30%):-24.0dBs
CN401
CN541
CN1901
CN351
D2/2
DVD/CD:+5.1dBs
ipod: +1.3dBs
IPOD&AV-BUS
A-b
A-a
A-a 1/2

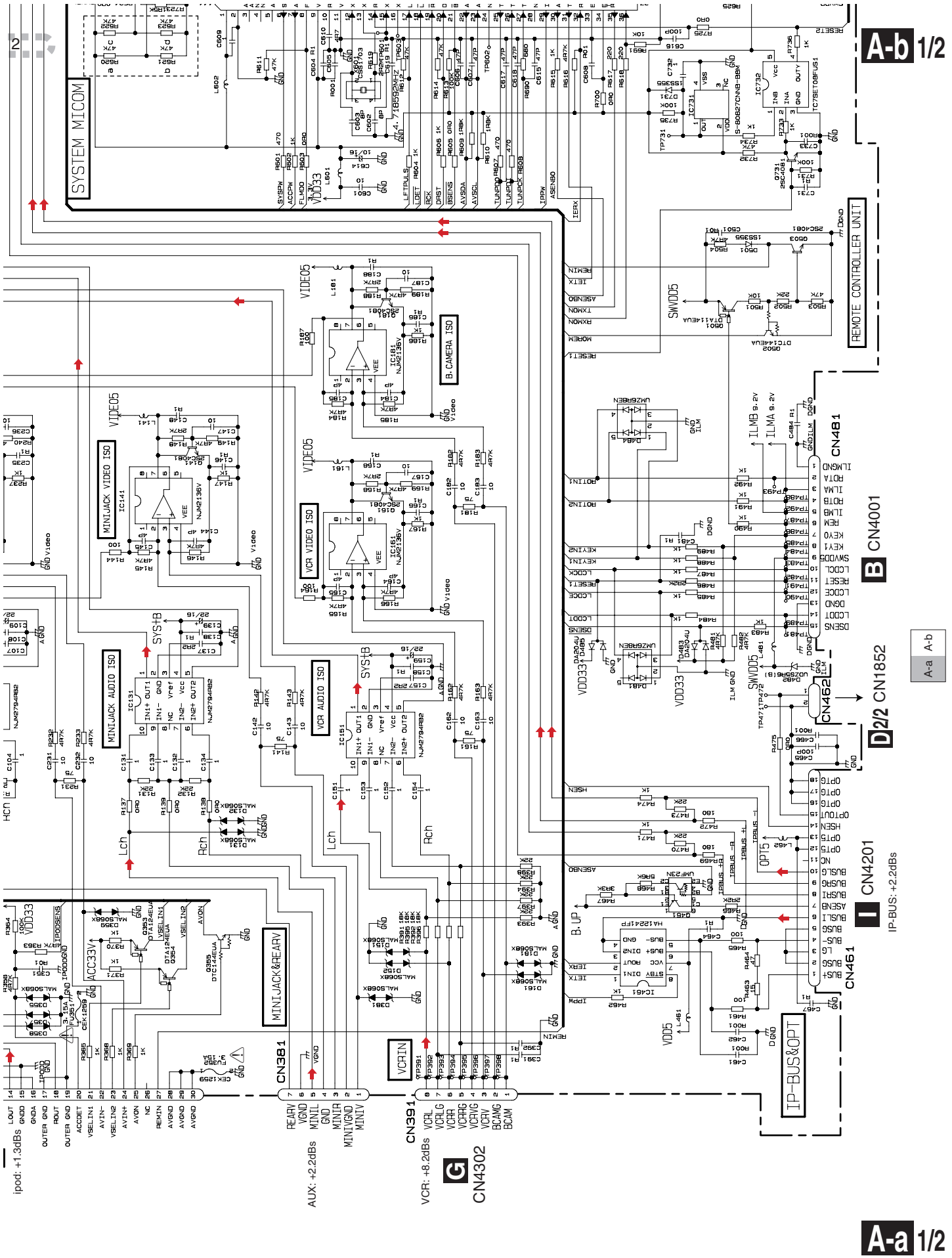
A-b 1/2
SYSTEM MICOM
REMOTE CONTROLLER UNIT
B. CAMERA ISO
MINIJACK VIDEO ISO
VCR VIDEO ISO
MINIJACK AUDIO ISO
VCR AUDIO ISO
MINIJACK&REARV
VCRIN
IP-BUS&OPT
CN481
CN4001
CN462
CN1852
CN4201
CN461
CN381
CN391
CN4302
ipod: +1.3dBs
AUX: +2.2dBs
VCR: +8.2dBs
IP-BUS: +2.2dBs
A-a 1/2

10.2 MOTHER UNIT(POWER SUPPLY PART)(GUIDE PAGE)

A-a 2/2

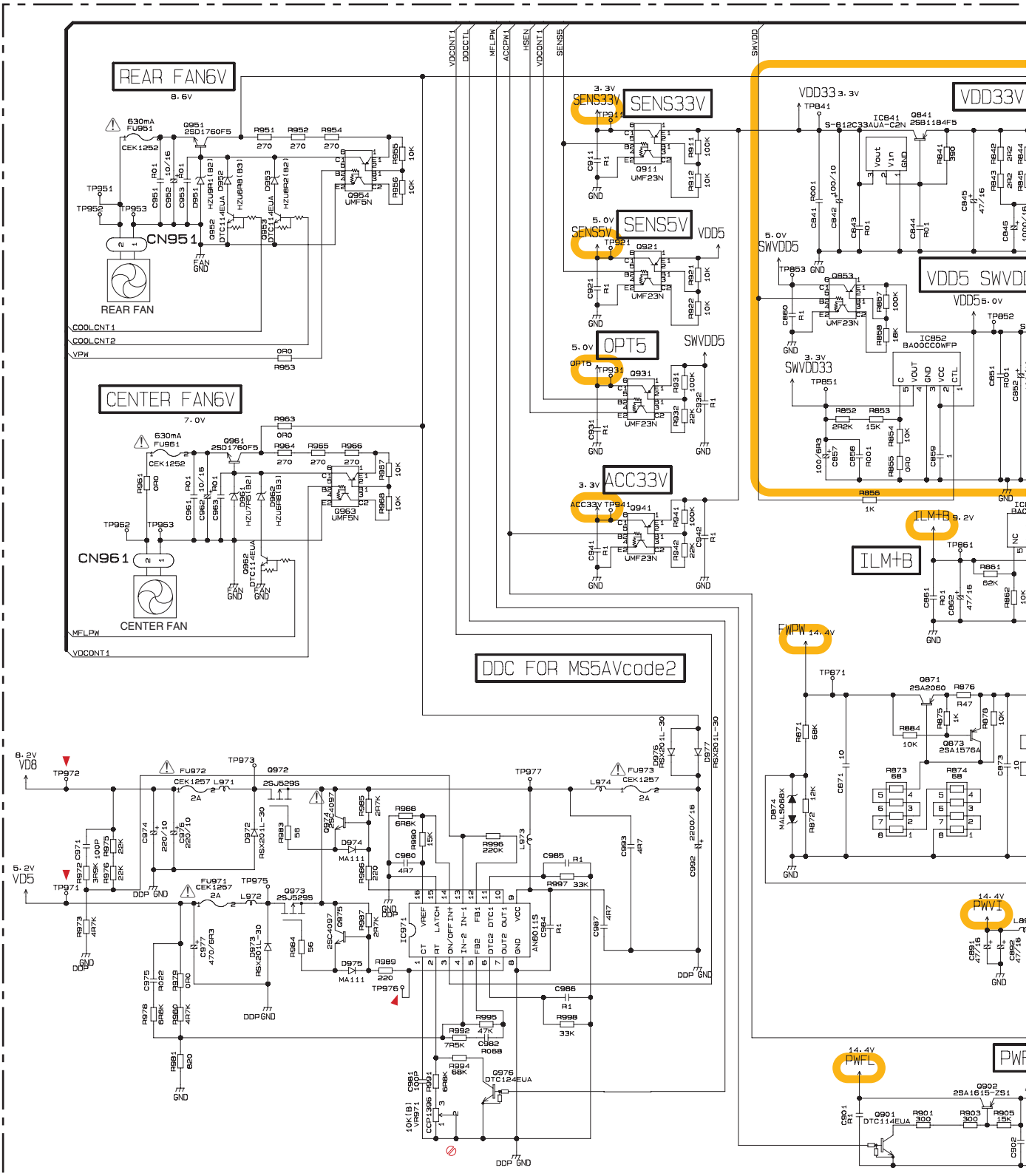

A2/2

A2/2 MOTHER UNIT(POWER SUPPLY PART)

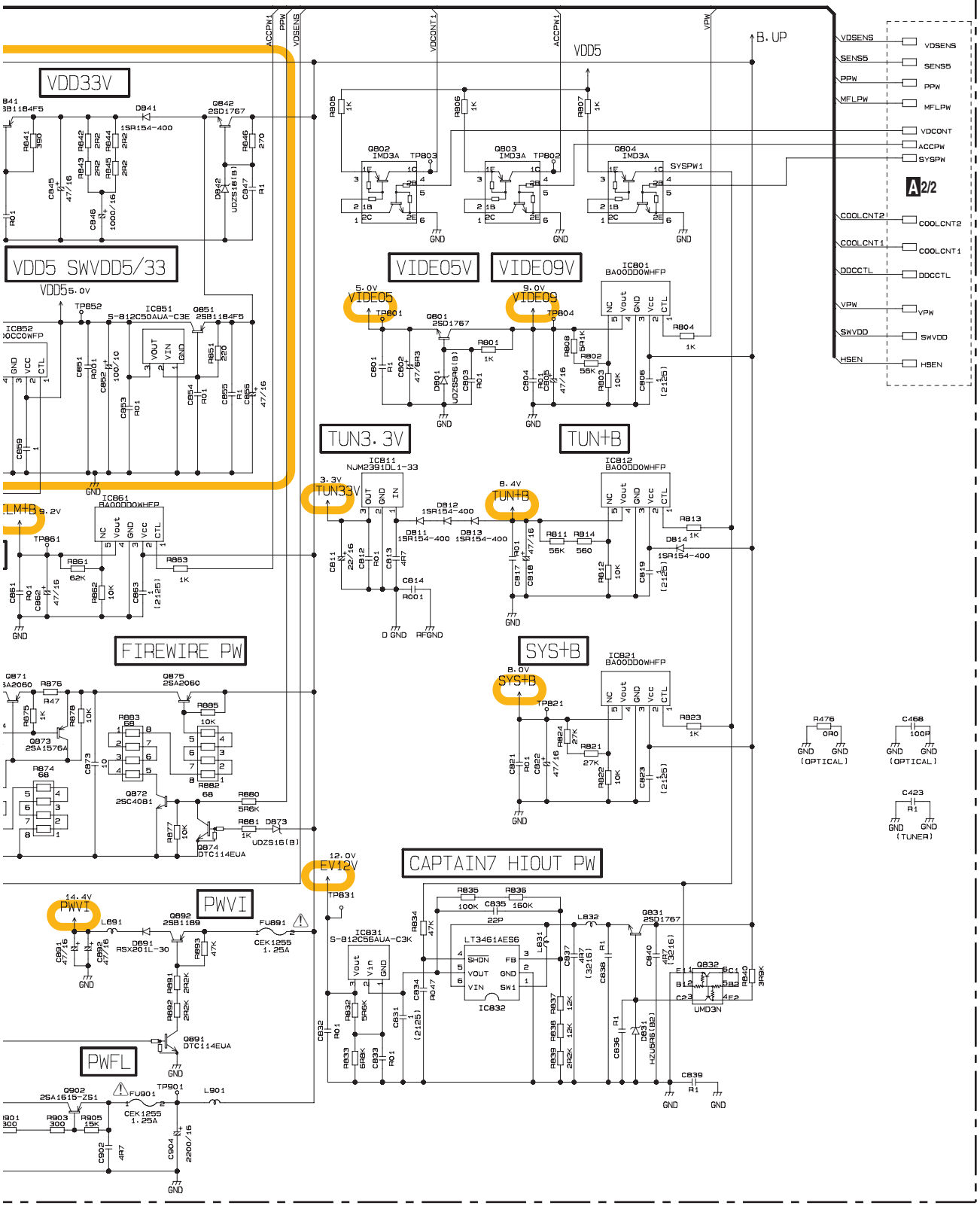

A2/2 MOTHER UNIT(POWER SUPPLY PART)

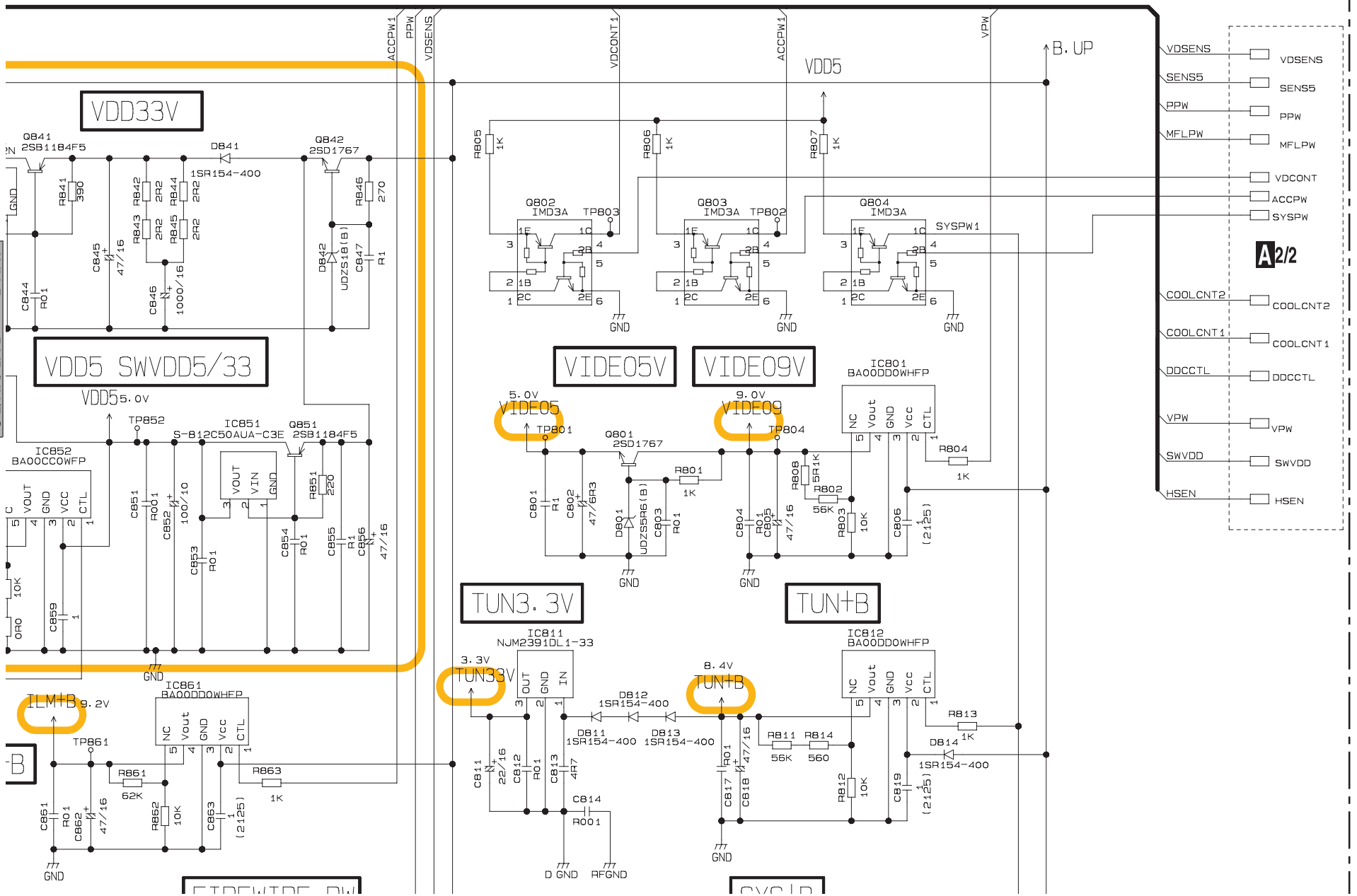

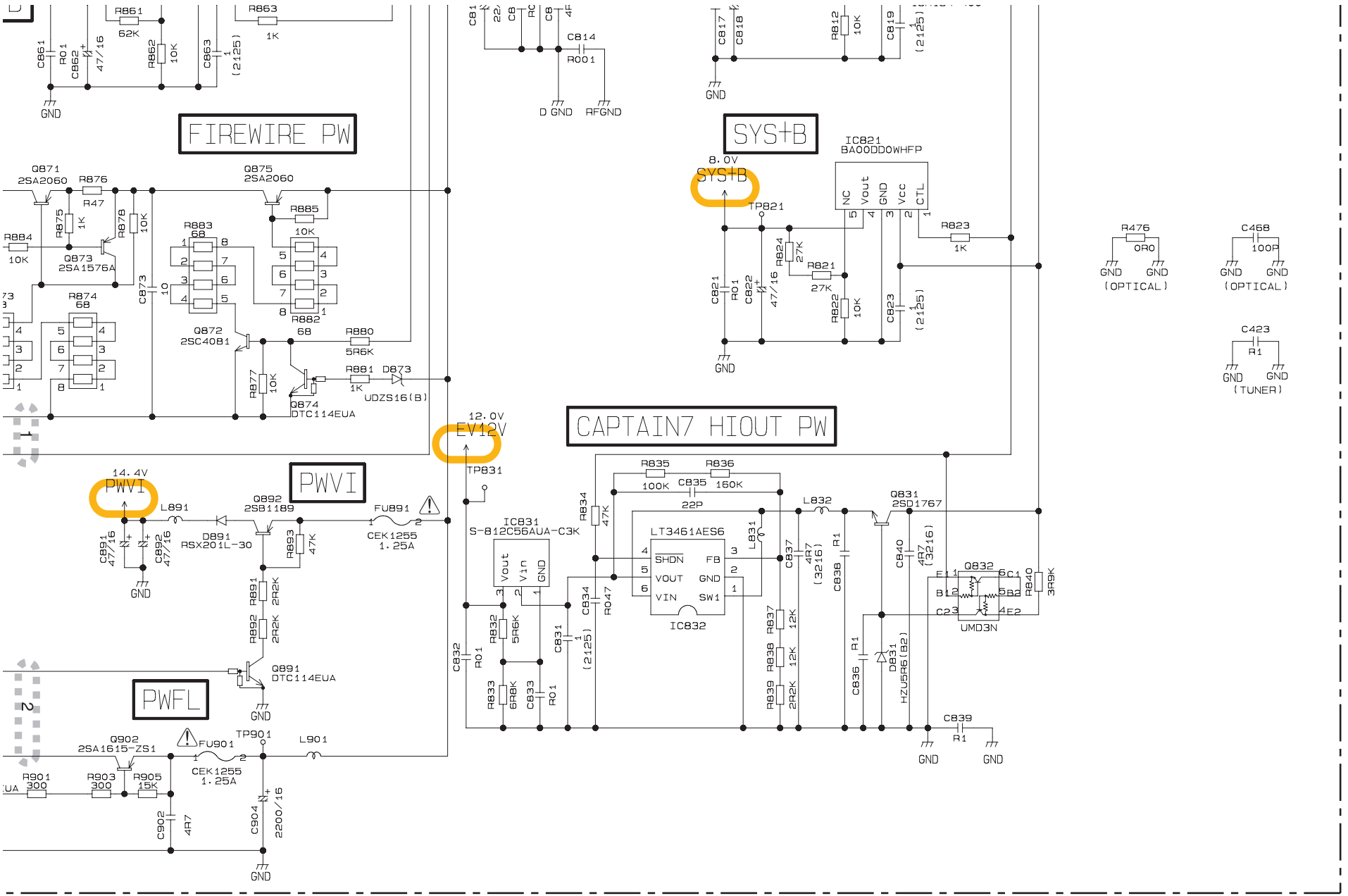

: The power supply is shown with the marked box.

AVH-P5950DVD/XN/RC

A-b 2/2

A-a A-b

121

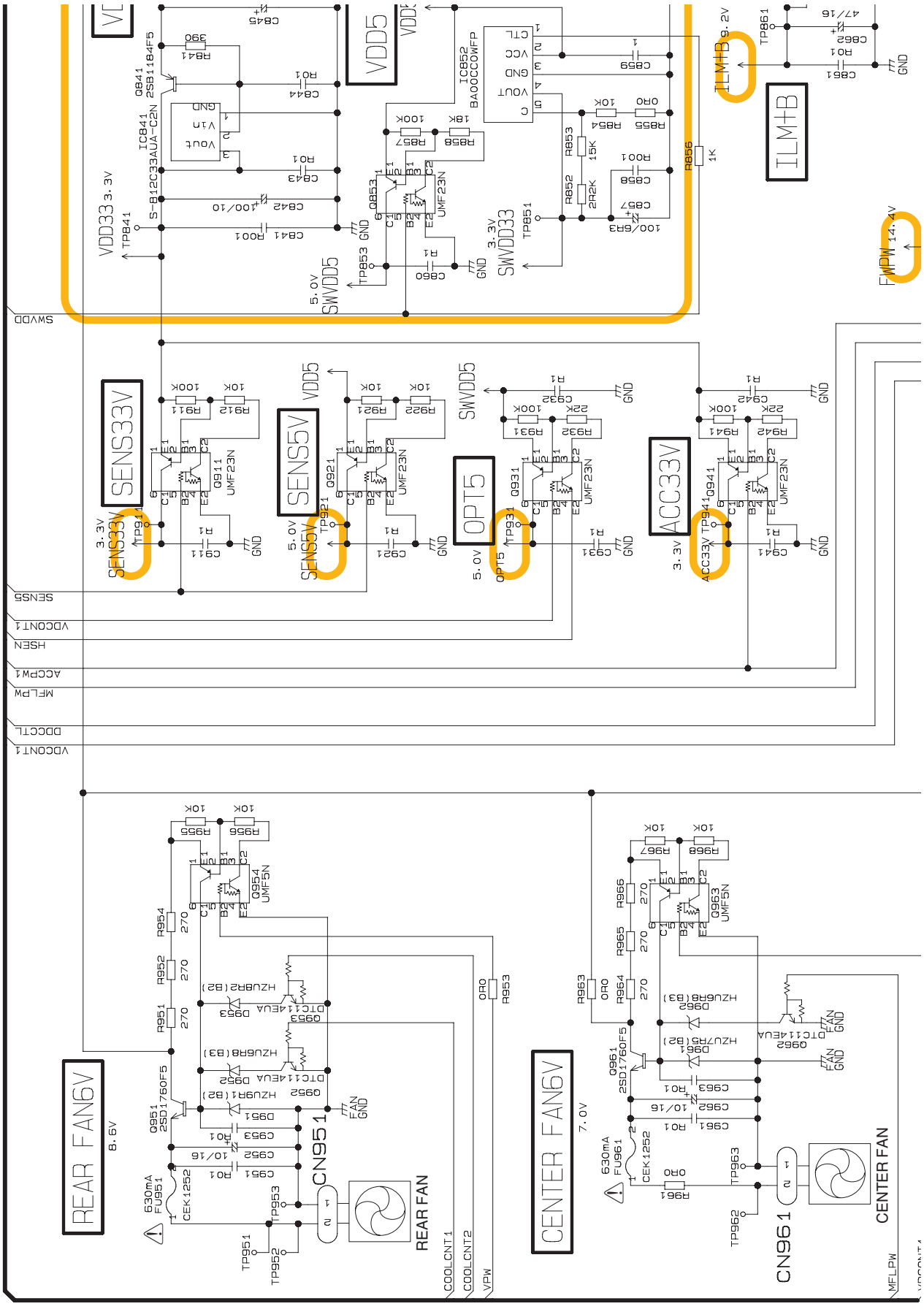

A-b 2/2
A-a 2/2
VDD5
ILM+B
SENS33V
SENS5V
OPT5
ACC33V
REAR FAN6V
CENTER FAN6V
CN951
CN961
REAR FAN
CENTER FAN
SWVDD
SENS5
VDCONT1
HSEN
ACCPW1
MFLPW
DDCCTL
VDCONT1
COOLCNT1
COOLCNT2
VPW
MFLPW

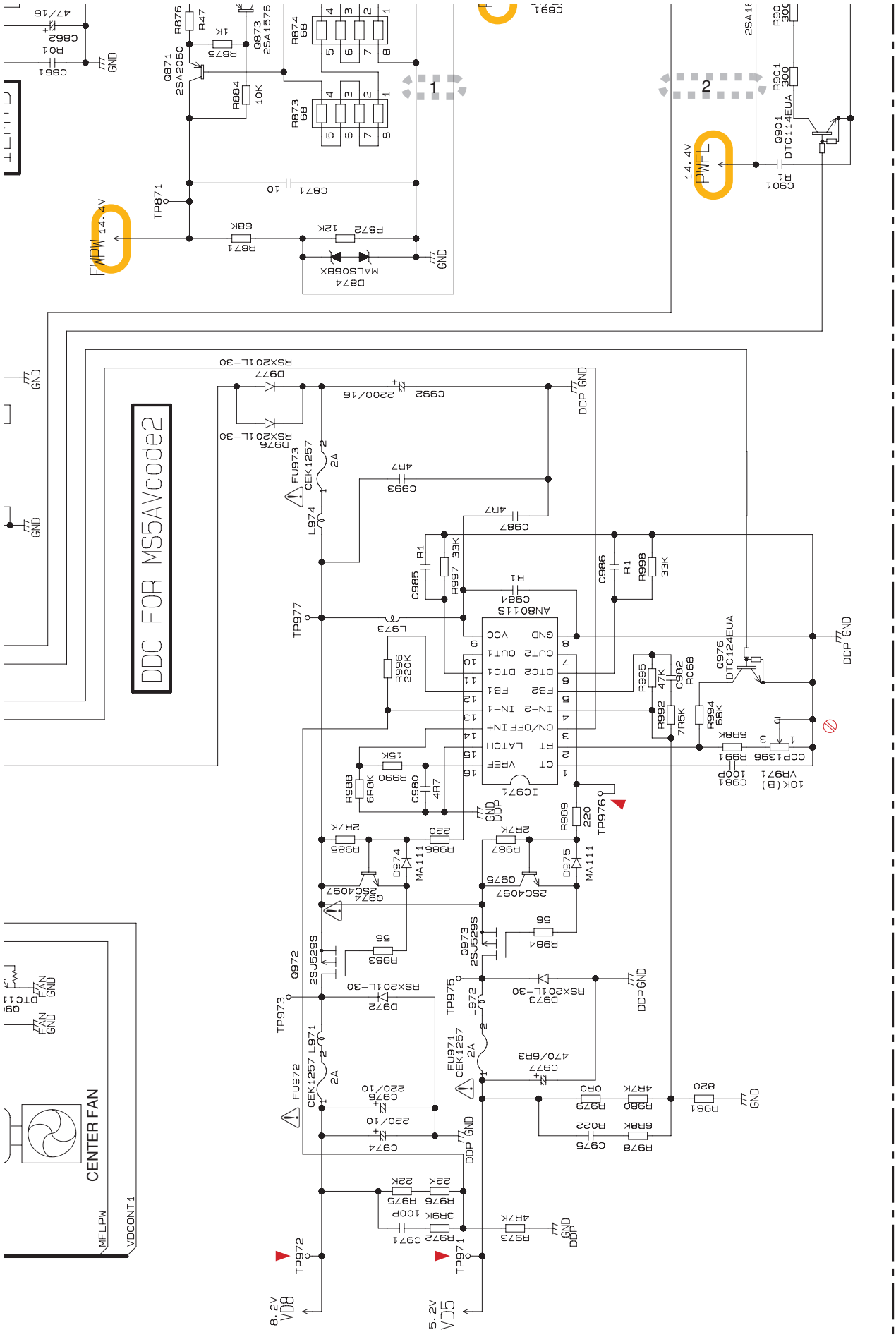
DDC FOR MS5AVcode2
CENTER FAN
MFLPW
VDCONT1
FWPW 14.4V
PWFL 14.4V
8.2V VD8
5.2V VD5
DDP GND
GND
AN8011S
IC971
Q972
Q973
Q974
Q975
Q976
Q977
Q871
Q873
Q901
FU971
FU972
FU973
L971
L972
L973
L974
TP971
TP972
TP973
TP975
TP976
TP977
TP871
D974
D975
D976
D977
D874
MALS068X
MA111
RSX201L-30
CEK1257
2SJ529S
2SC4097
2SA1576
2SA2060
DTC114EUA
DTC124EUA

10.3 KEYBOARD UNIT

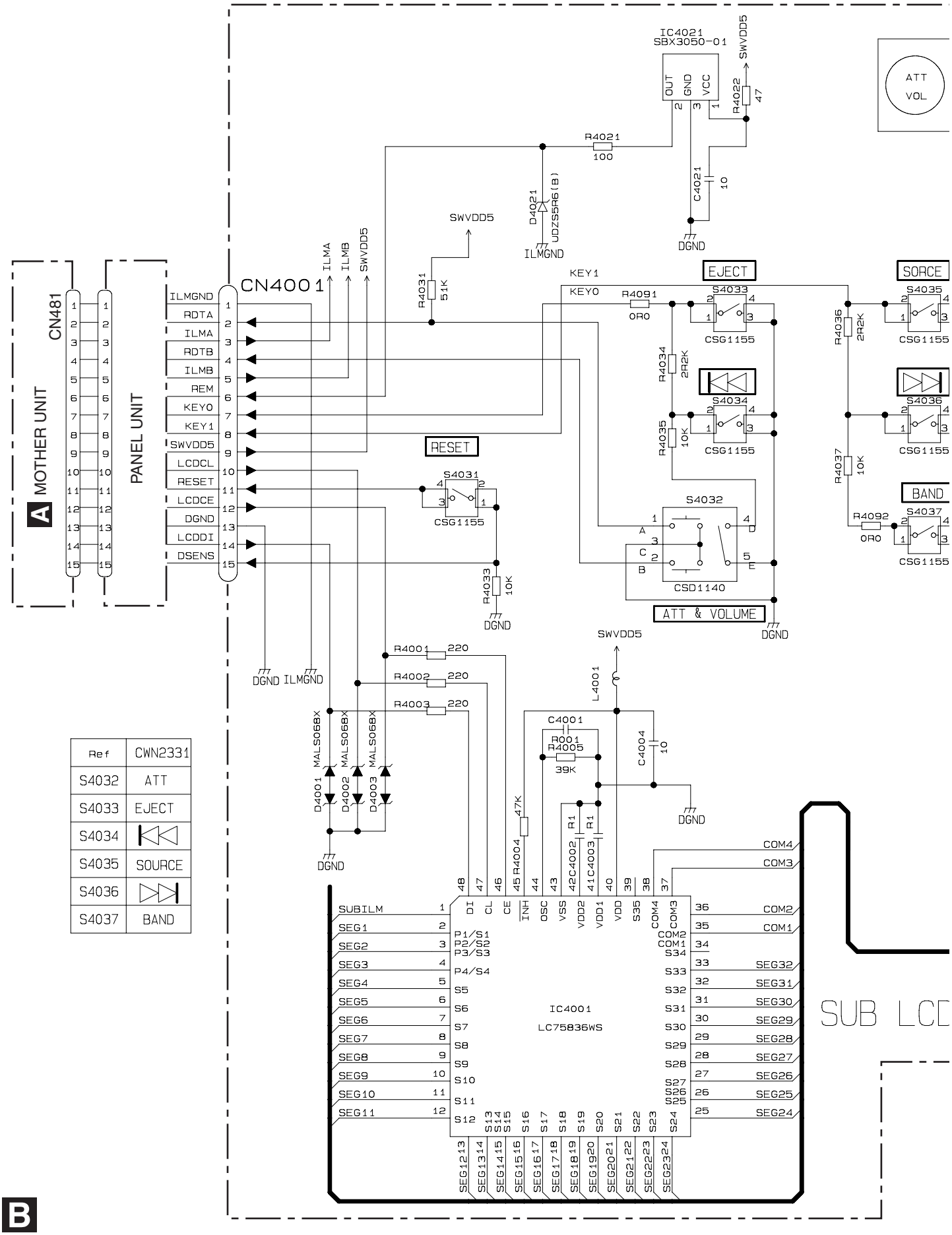

Ref	CWN2331
S4032	ATT
S4033	EJECT
S4034	
S4035	SOURCE
S4036	
S4037	BAND

B KEYBOARD UNIT

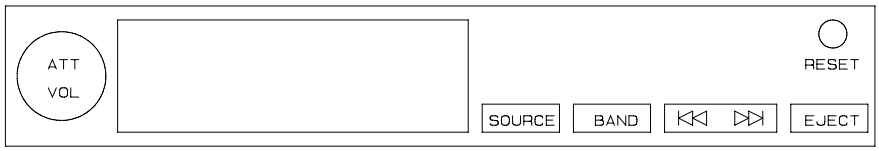

BLE : CL-197HB1-D(CDE):2.9typ～3.1Vmax (20mA)
RED : CL-195SR-CD:2.0typ～2.6Vmax (20mA)
WHT : NESW505c-5273:3.6typ～4.0Vmax (15mA)

Circuit Block	Reference
μ-COM Block & interface Block	4001～4020
Remote controll senser	4021～4030
SW Block	4031～4040
Product Change	4091～
Backlight ILM	4041～4050
RED LED	4051～4060
Blue LED	4071～

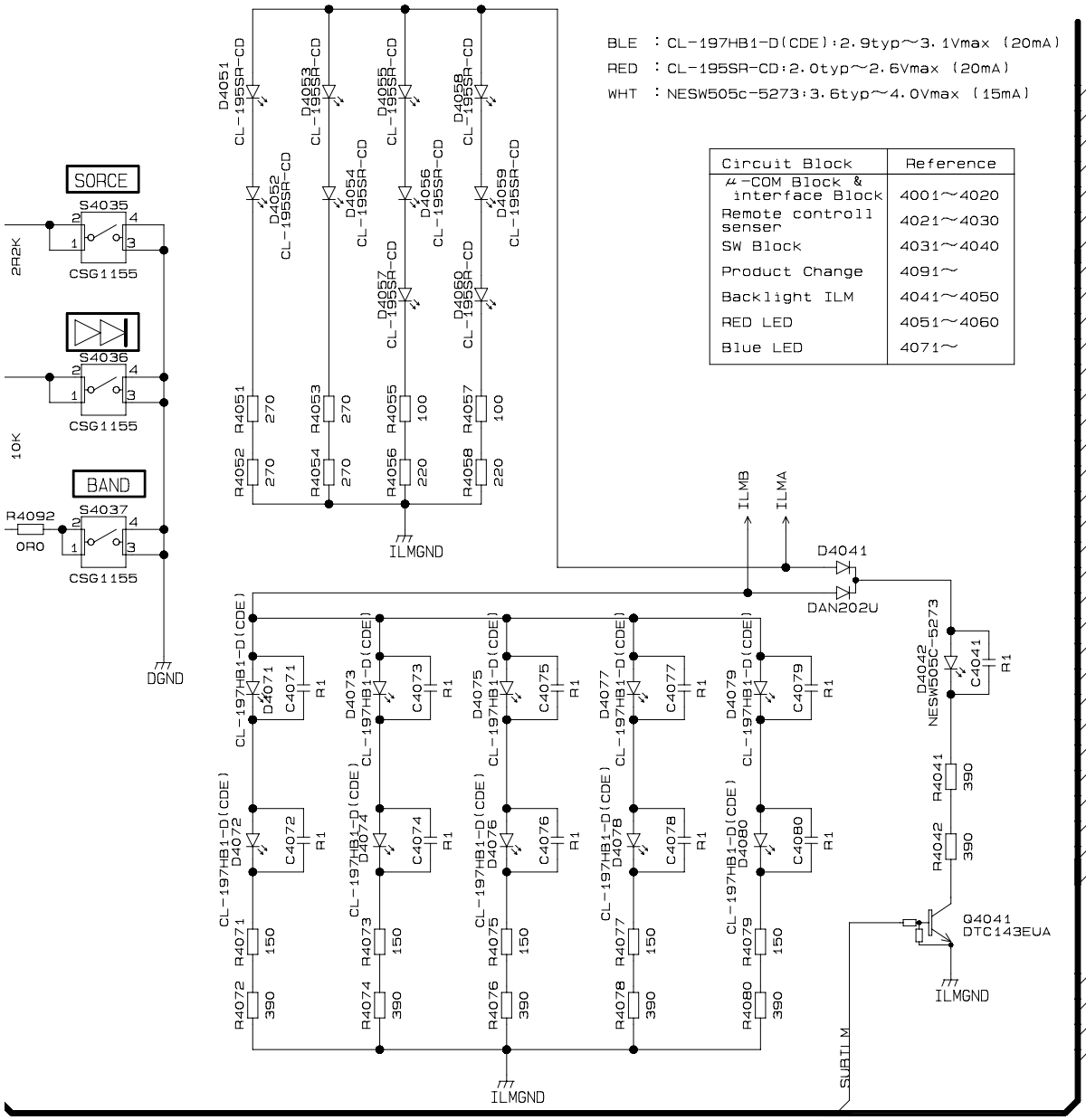

SUB LCD

JB LCD CONTROL

10.4 MONITOR PCB(MONITOR PART)(GUIDE PAGE)

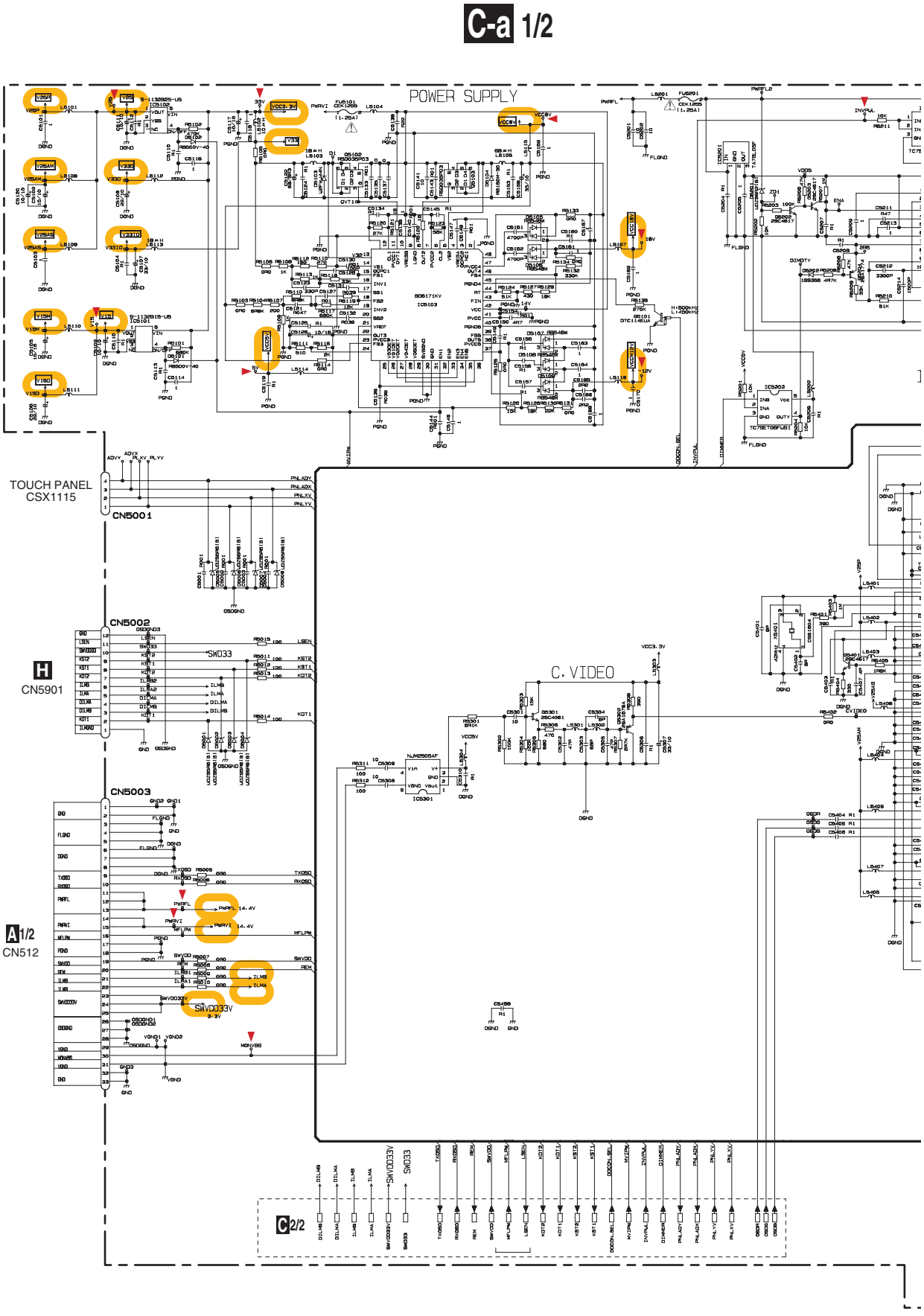

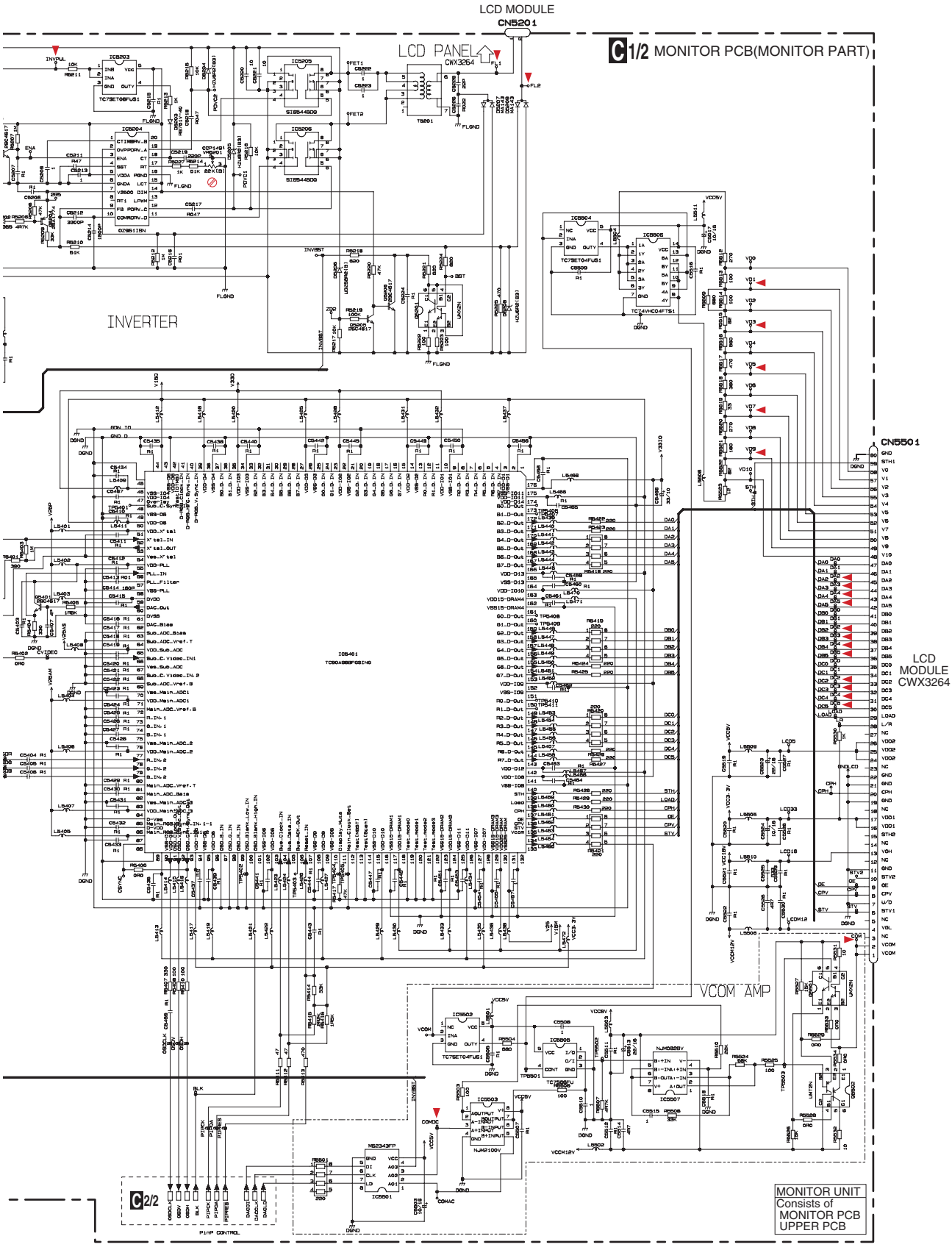
LCD MODULE
CN5201
C 1/2 MONITOR PCB(MONITOR PART)
LCD PANEL
CWX3264
INVERTER
CN5501
LCD MODULE CWX3264
VCOM AMP
C 2/2
PinP CONTROL
MONITOR UNIT
Consists of
MONITOR PCB
UPPER PCB

C-b 1/2

C-a C-b

LCD MODULE

CN5201

C 1/2 MONITOR PCB(MONITOR PART)

AVH-P5950DVD/XN/RC

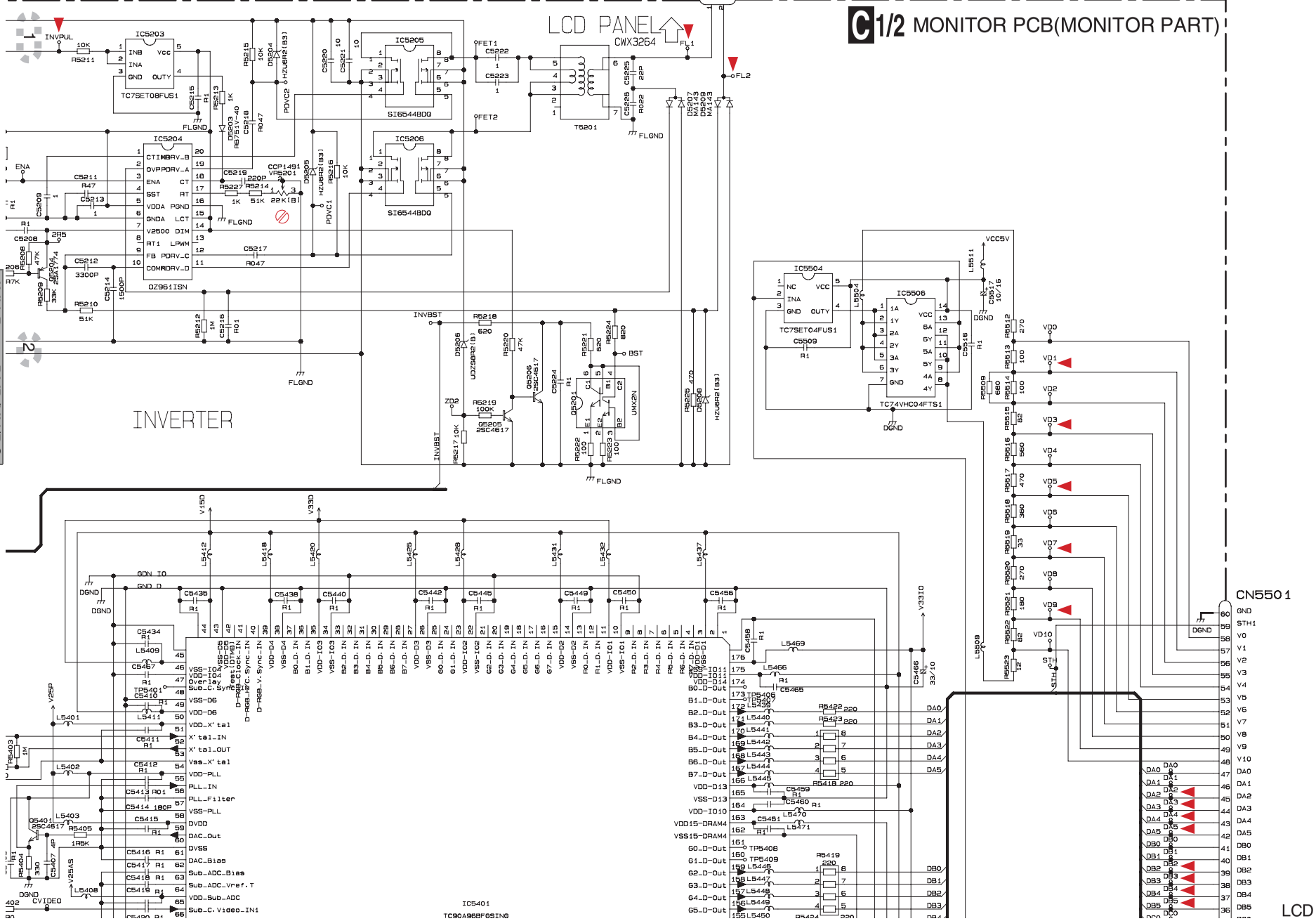

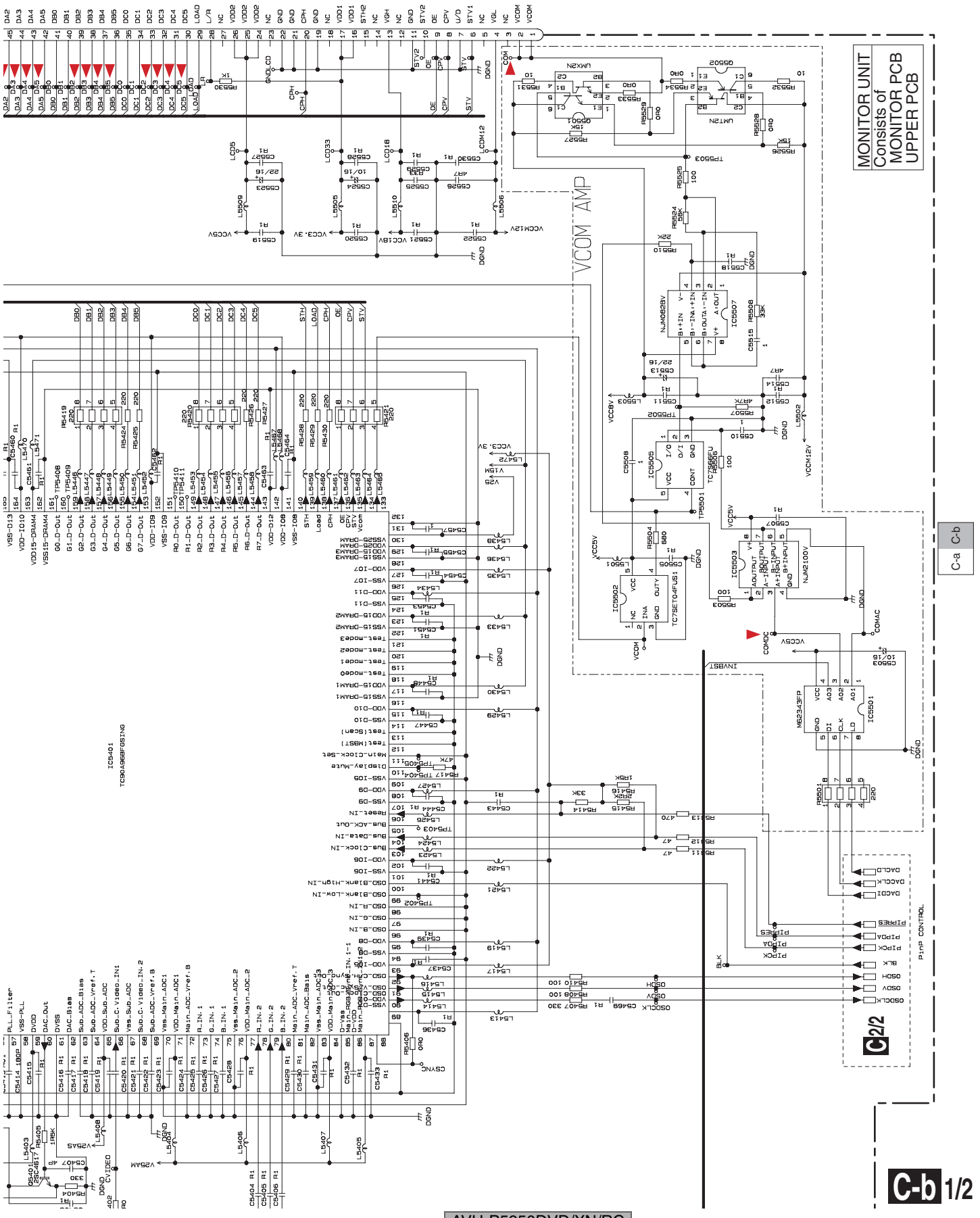
LCD MODULE CWX3264
MONITOR UNIT
Consists of
MONITOR PCB
UPPER PCB
VCOM AMP
C-a
C-b
C2/2
PinP CONTROL
C-b 1/2

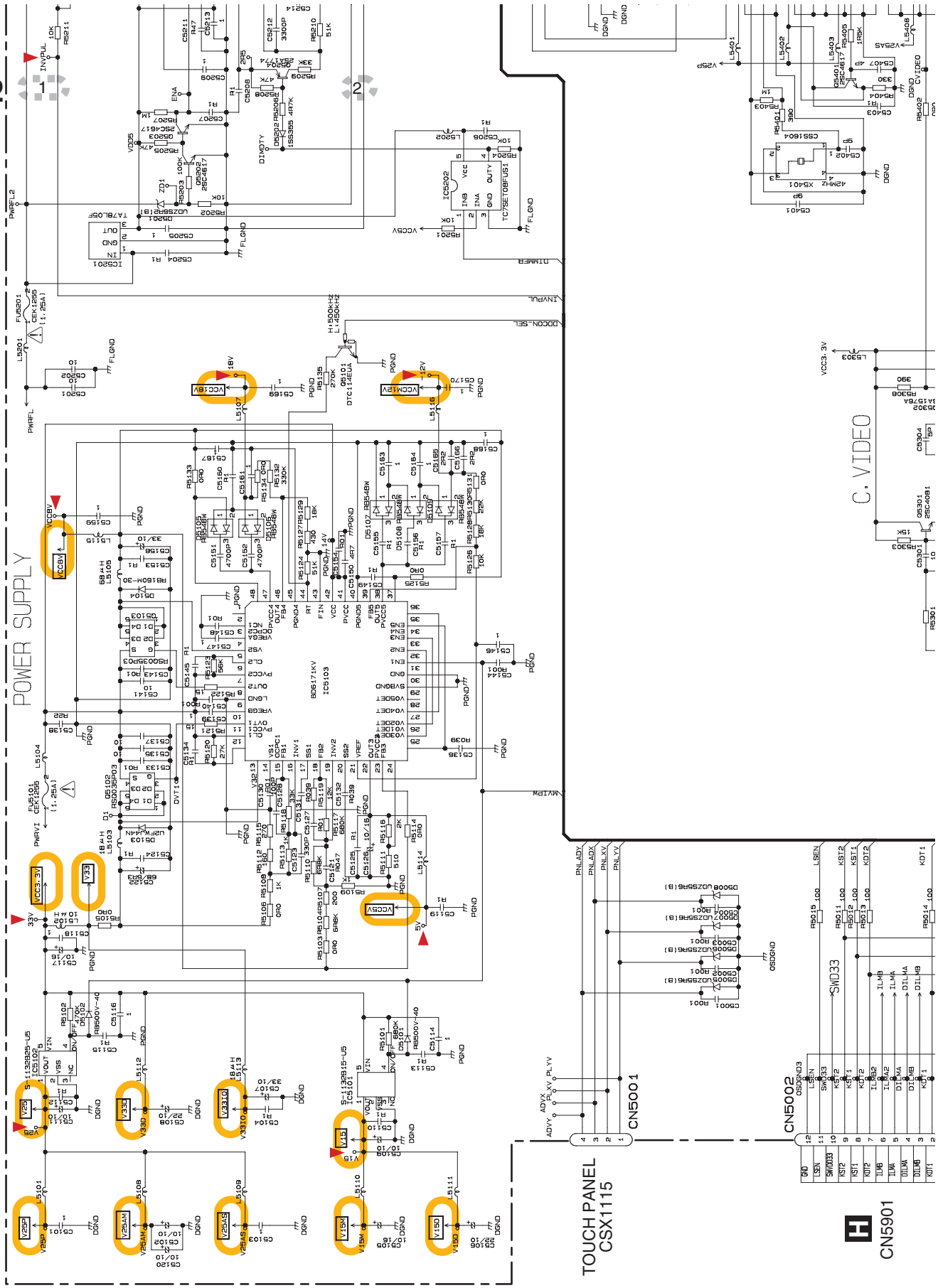
POWER SUPPLY
C. VIDEO
TOUCH PANEL
CSX1115
CN5001
CN5002
CN5901

C-a C-b

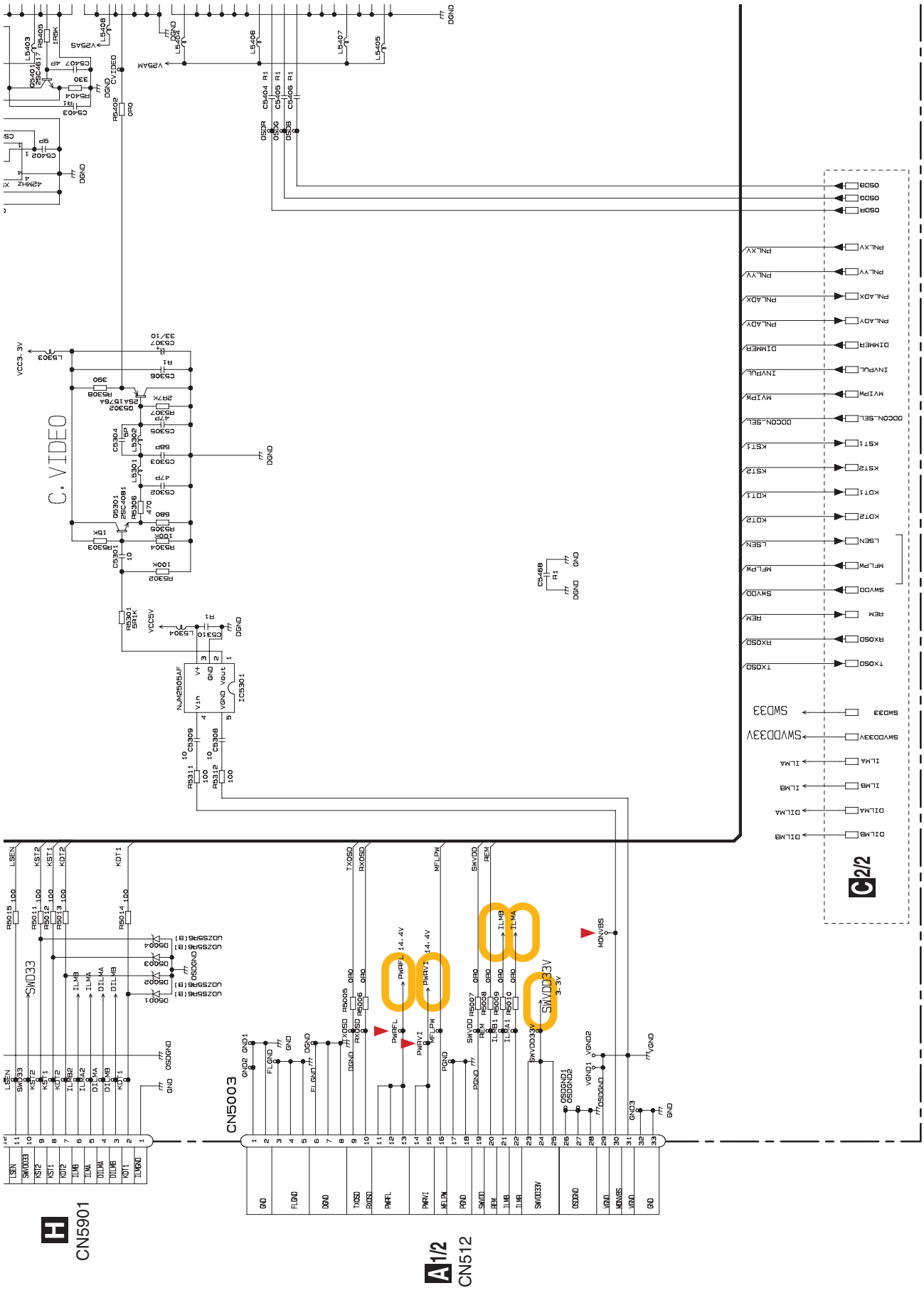
C-b 1/2
C-a C-b
C2/2
C. VIDEO
CN5003
H
CN5901
A1/2
CN512
C-a 1/2

10.5 MONITOR PCB(OSD & µCON PART)(GUIDE PAGE)

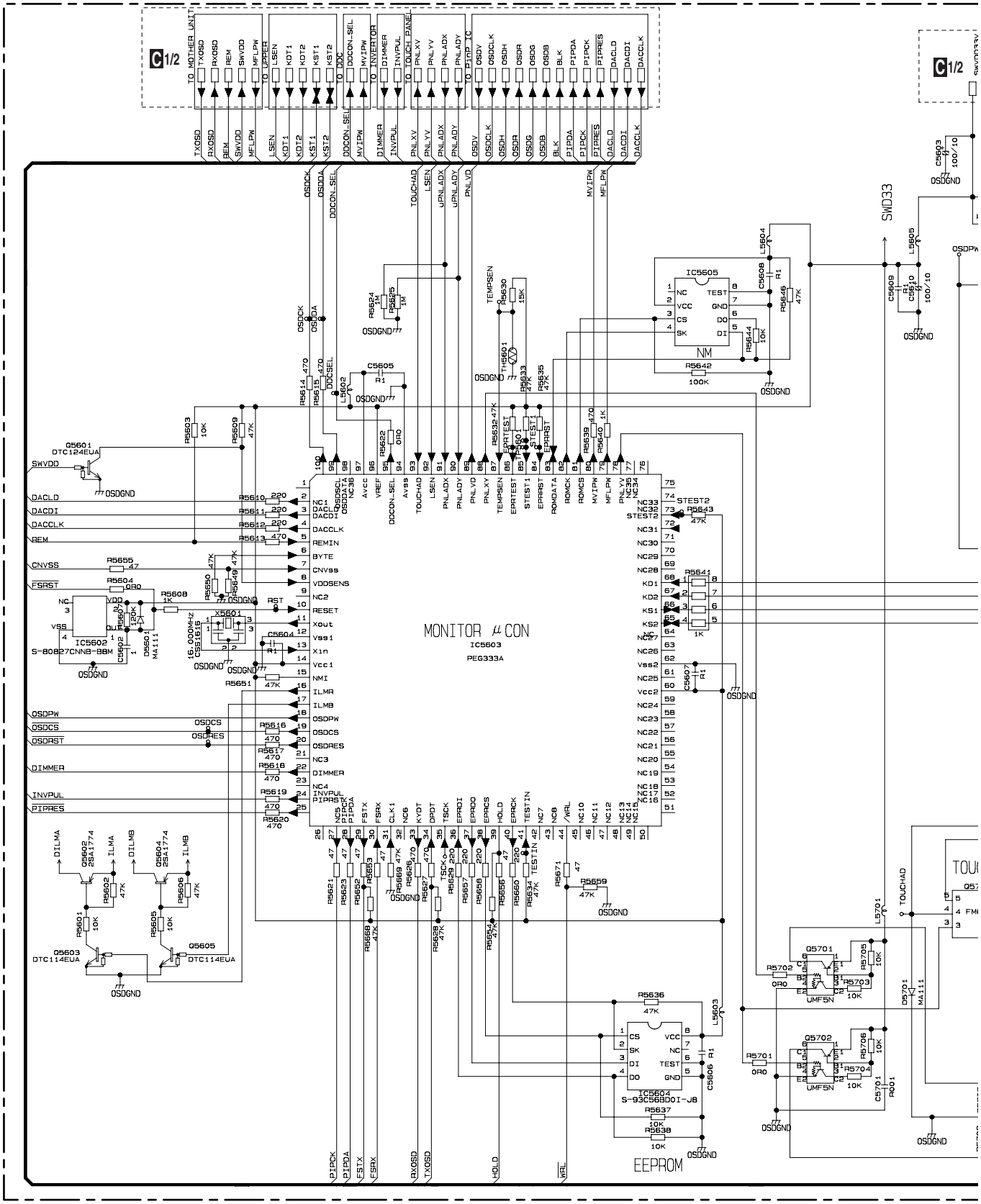

C2/2 MONITOR PCB(OSD & μCON PART)

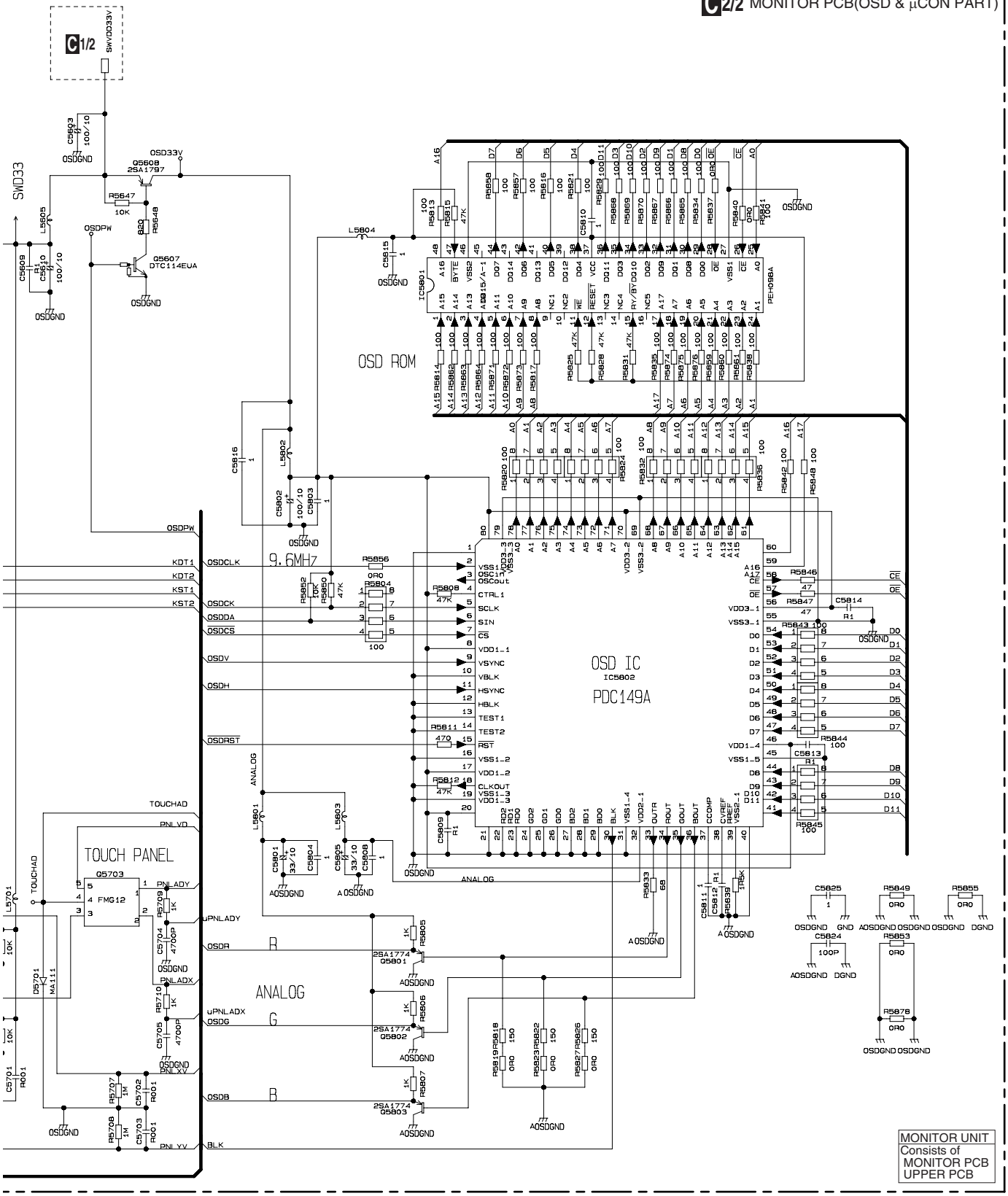

C2/2

C 2/2 MONITOR PCB(OSD & μCON PART)

MONITOR UNIT
Consists of
MONITOR PCB
UPPER PCB

OSD IC
IC5802
PDC149A

ANALOG

TOUCH PANEL

C-a C-b

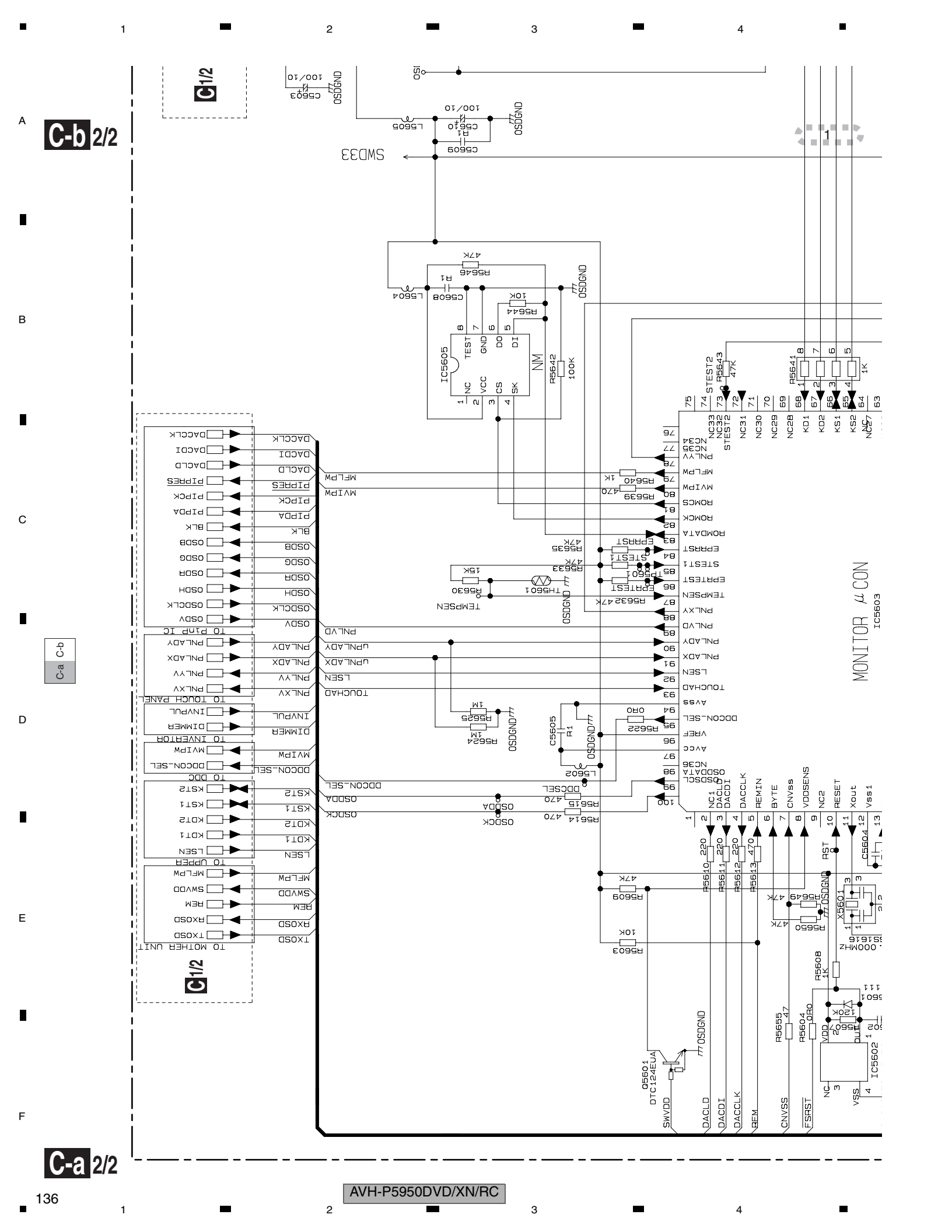
C-b 2/2
C-a 2/2
C1/2
C-a C-b
MONITOR μCON
IC5603
IC5605
IC5602
Q5601
DTC124EUA
SWD33
TO MOTHER UNIT
TO UPPER
TO DDC
TO INVERTOR
TO TOUCH PANEL
TO PinP IC
OSDGND
NM

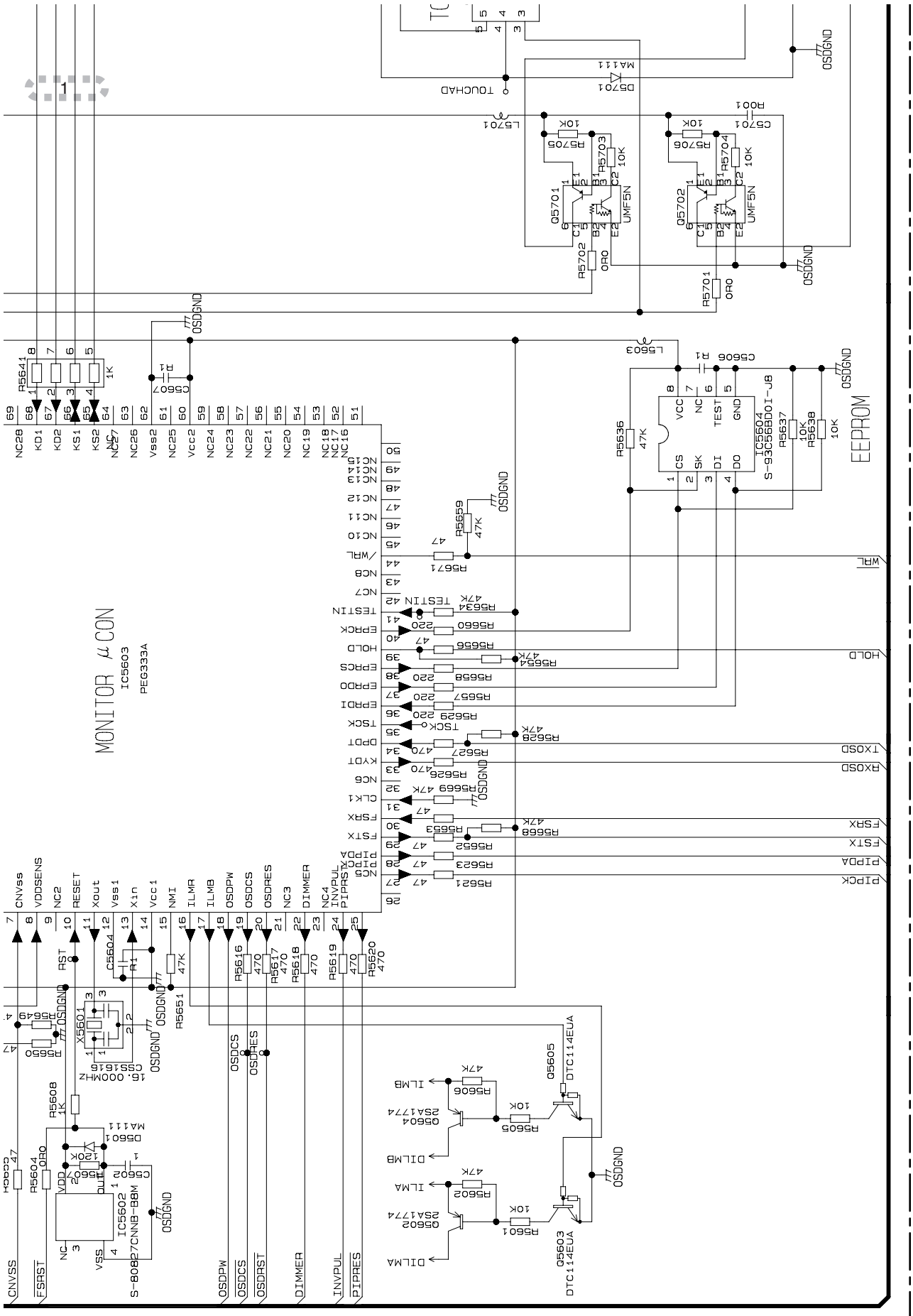
MONITOR μCON
IC5603
PEG333A
EEPROM
IC5604
S-93C56BD0I-J8
IC5602
S-80827CNNB-B8M
X5601
16.000MHZ
CSS1616
TOUCHAD
OSDGND
CNVSS
FSRST
OSDPW
OSDCS
OSDRST
DIMMER
INVPUL
PIPRES
TESTIN
WRL
HOLD
TXOSD
RXOSD
FSRX
FSTX
PIPDA
PIPCK
TSCK
EPRCK
EPRCS
EPRDO
EPRDI
DPDT
KYDT
CLK1
ILMB
ILMA
DILMB
DILMA
RESET
RST
VDD
OUT
VSS
NC
VCC
CS
SK
DI
DO
TEST

10.6 DVD CORE UNIT(1/2)(GUIDE PAGE)

D-a 1/2

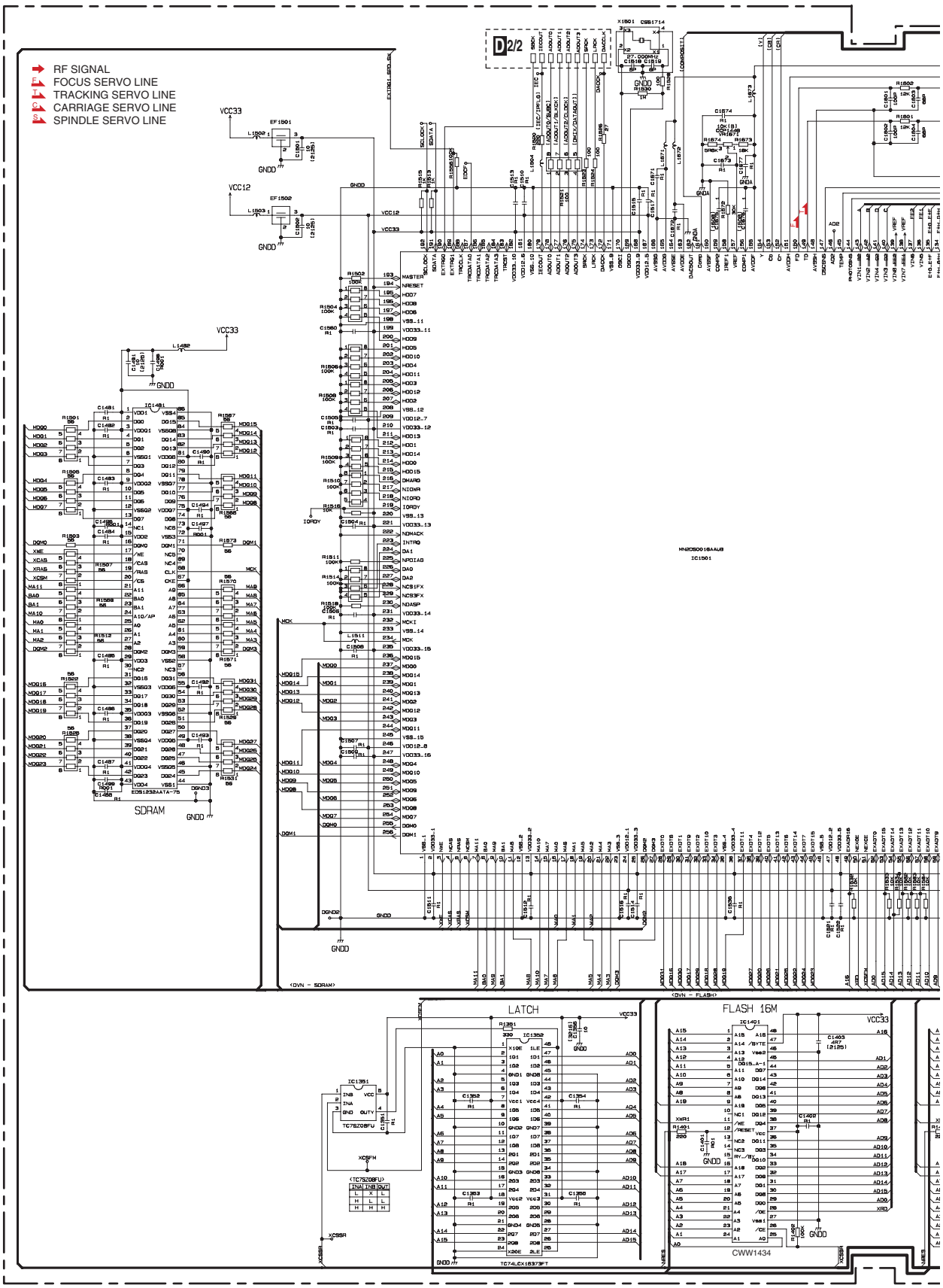

D 1/2

D-b 1/2

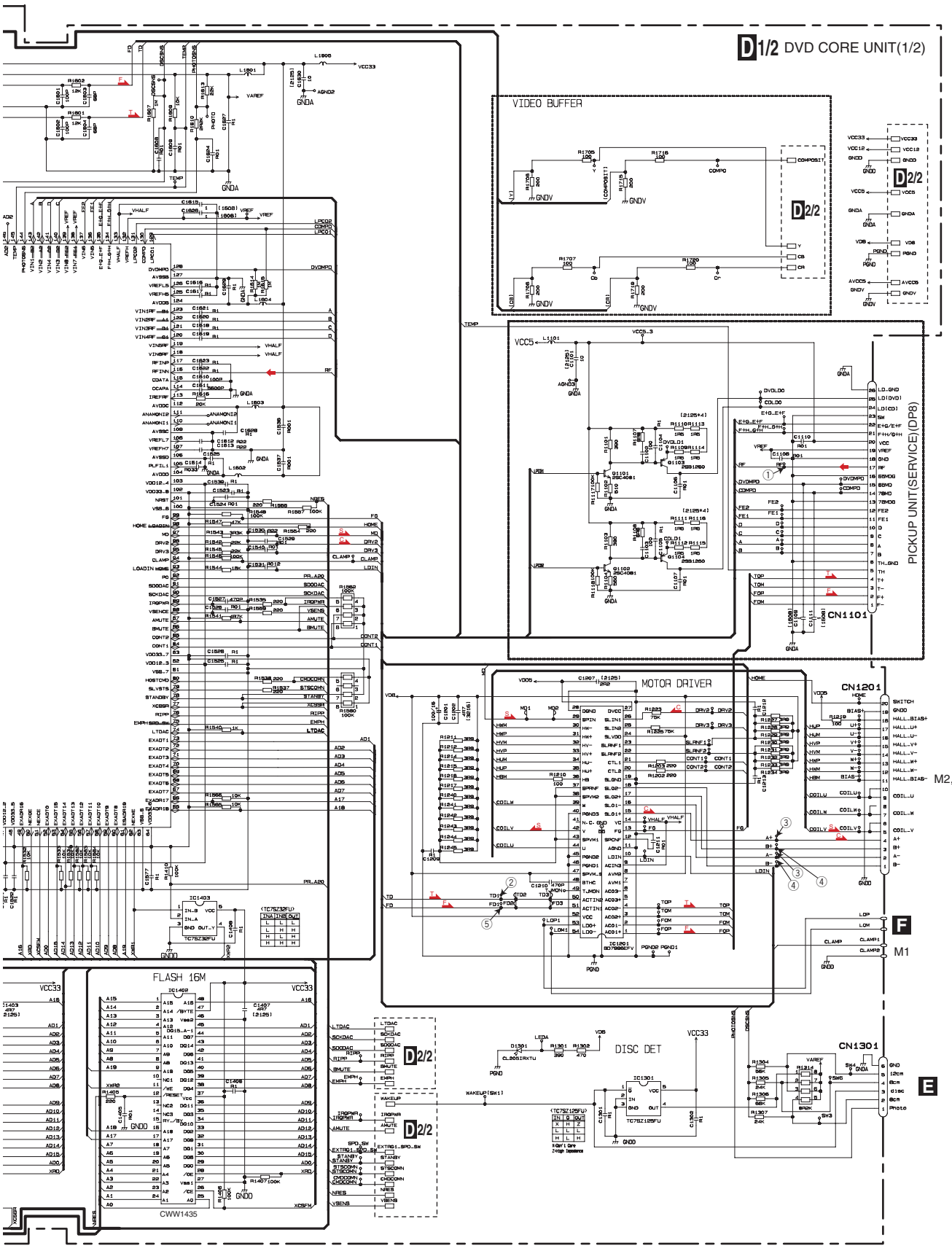
D1/2 DVD CORE UNIT(1/2)
VIDEO BUFFER
PICKUP UNIT(SERVICE)(DP8)
CN1101
MOTOR DRIVER
CN1201
M2,M3
M1
DISC DET
CN1301
FLASH 16M
CWW1435
D2/2
F
E

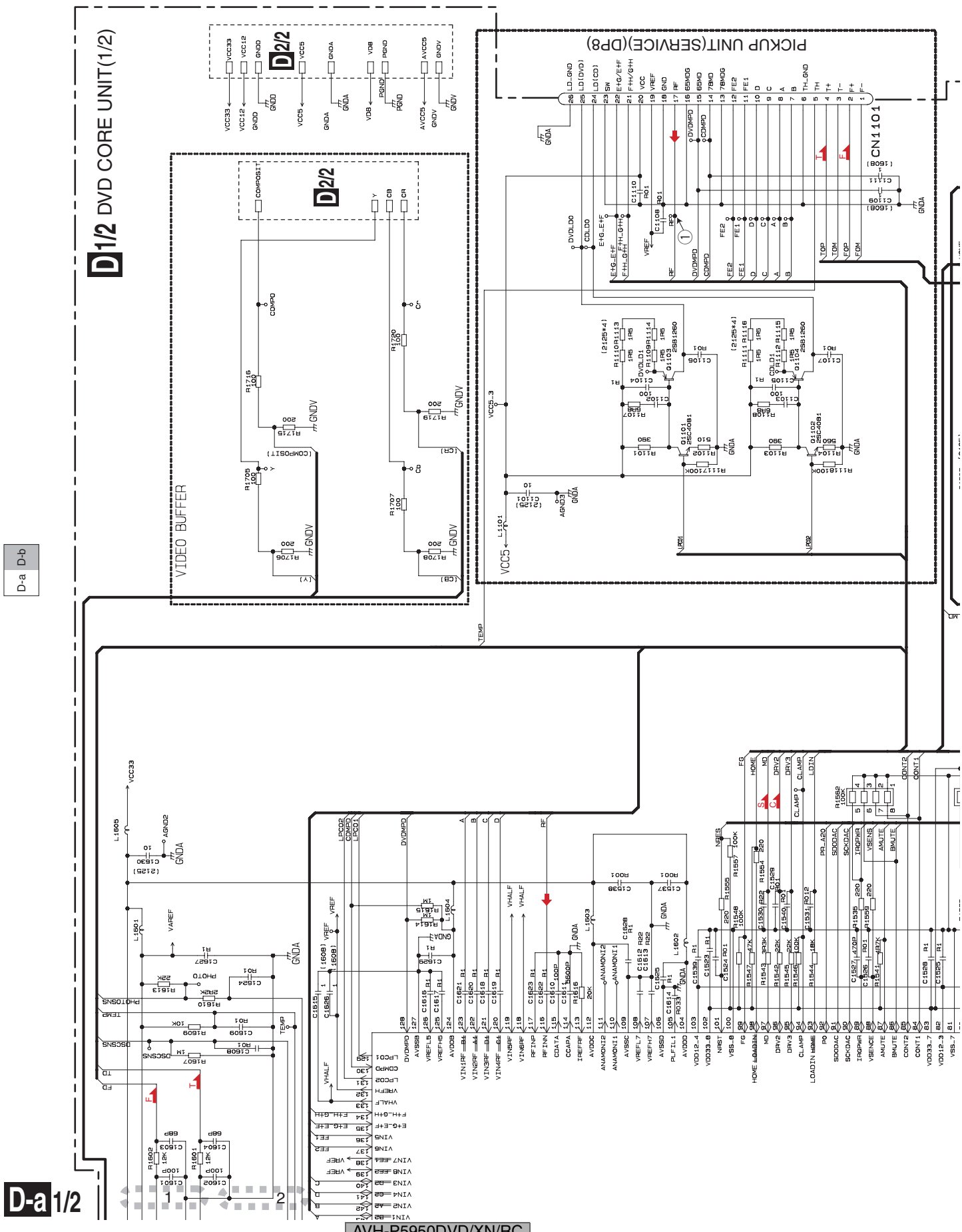
D1/2 DVD CORE UNIT(1/2)
D2/2
PICKUP UNIT(SERVICE)(DP8)
CN1101
VIDEO BUFFER
D-a 1/2
D-a D-b

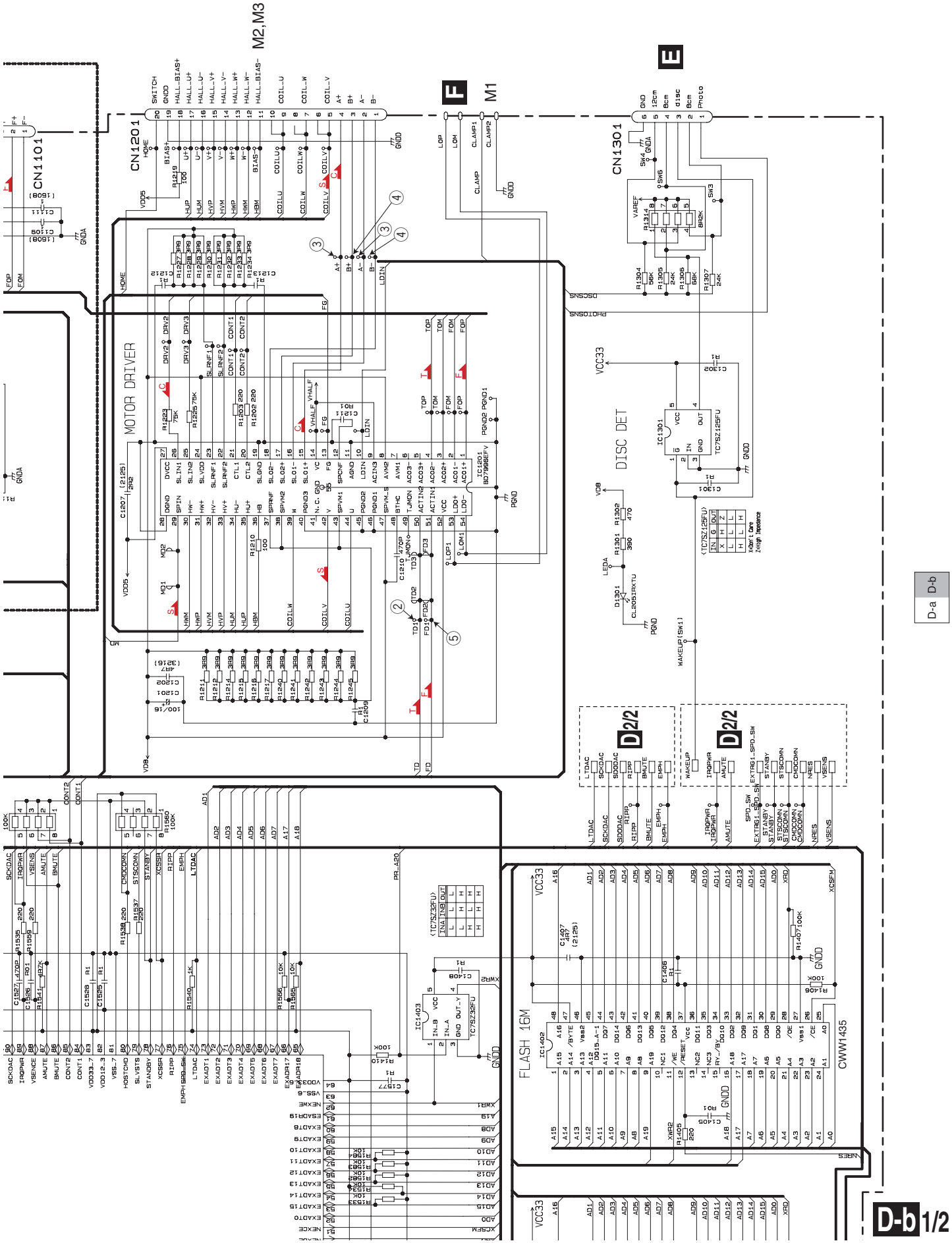

M2,M3
M1
CN1201
CN1101
CN1301
MOTOR DRIVER
DISC DET
FLASH 16M
CWW1435
D2/2
D2/2
D-a D-b
D-b 1/2

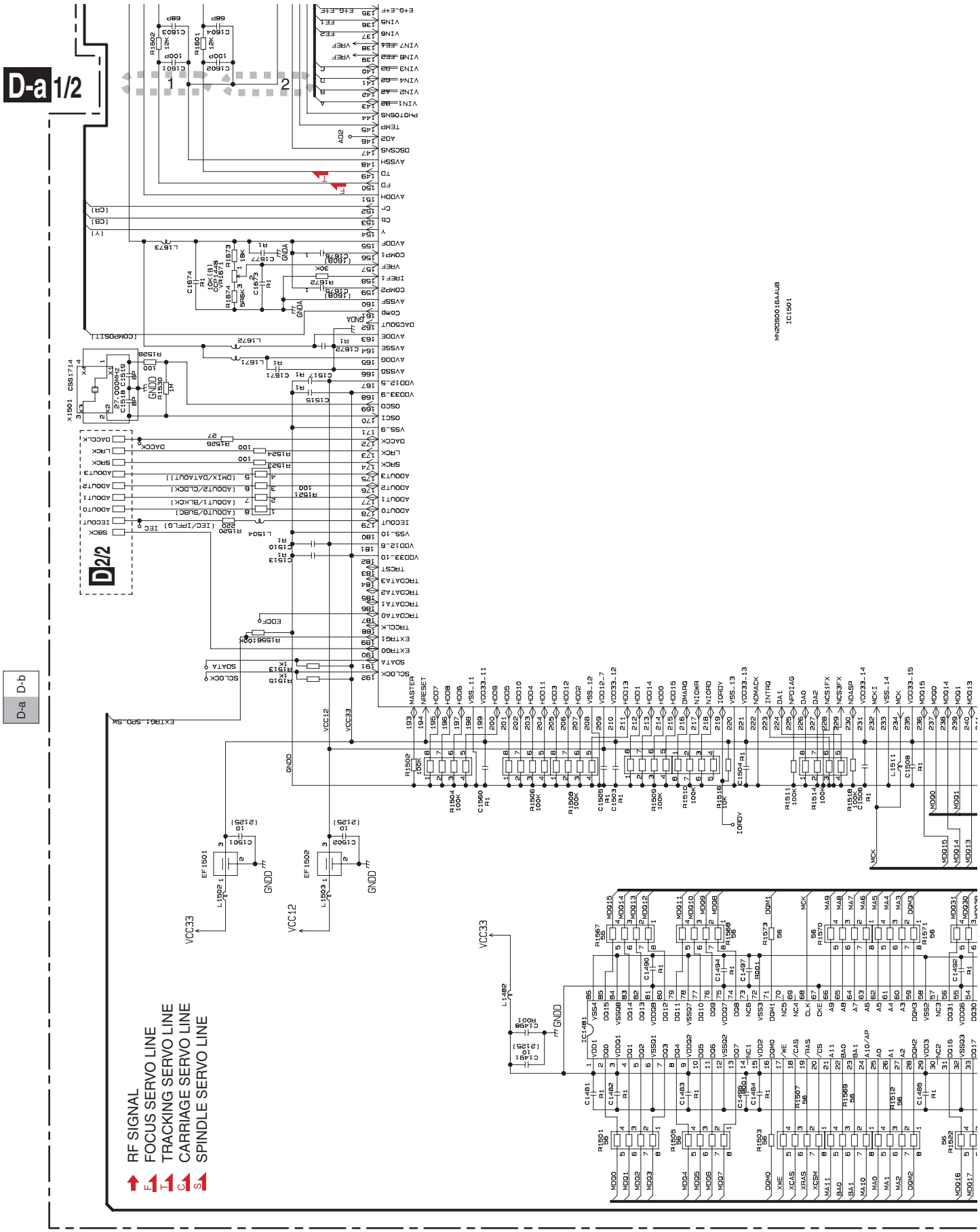
D-a 1/2
D2/2
D-a D-b
RF SIGNAL
FOCUS SERVO LINE
TRACKING SERVO LINE
CARRIAGE SERVO LINE
SPINDLE SERVO LINE
MN2DS0016AAUB
IC1501
X1501 CSS1714
EF1501
EF1502
VCC33
VCC12
GNDD
EXTRG1 SPD SW

D-a 1/2

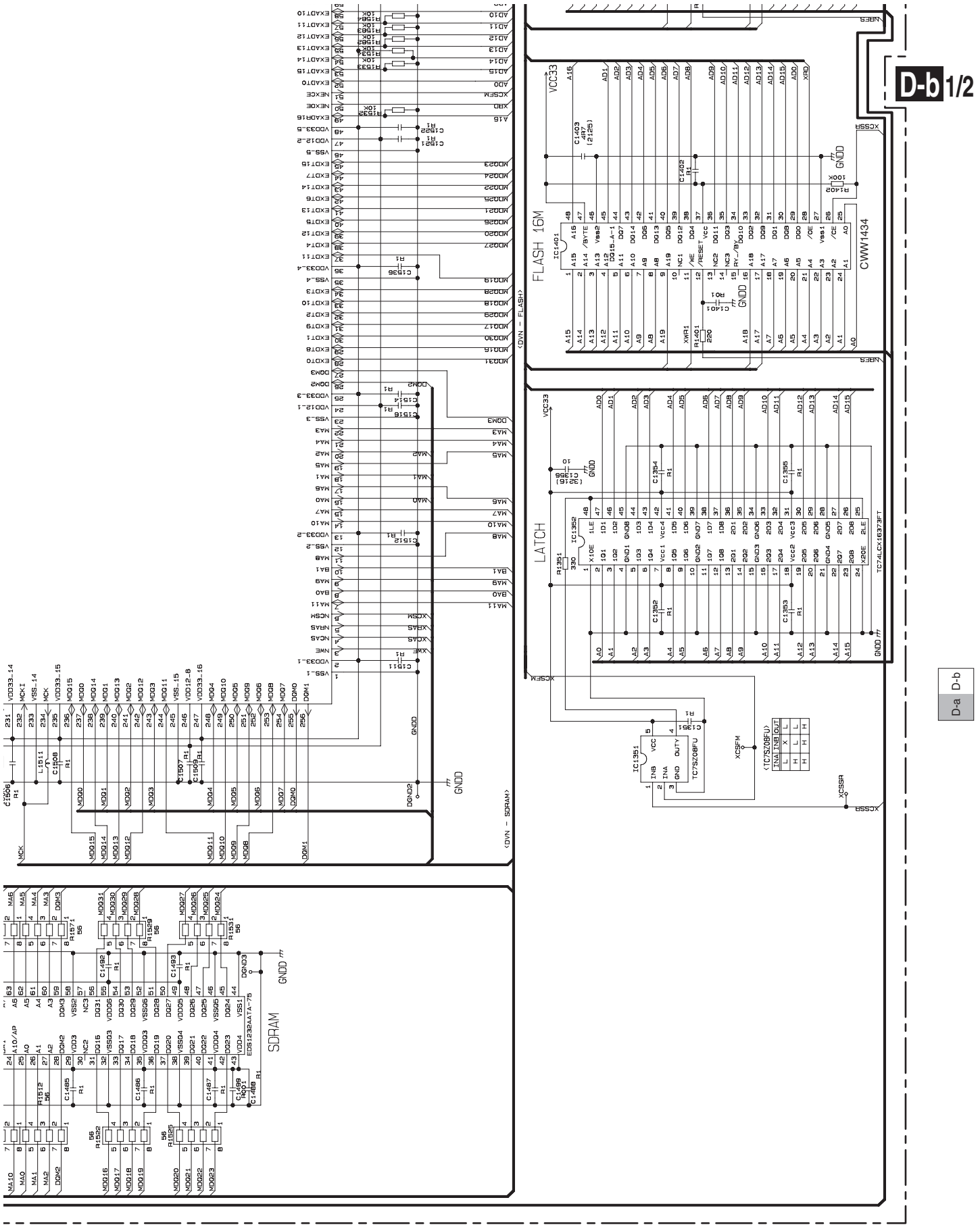
D-b 1/2
FLASH 16M
CWW1434
LATCH
TC74LCX16373FT
SDRAM
EDS1232AATA-75
TC7SZ08FU
GNDD
<DVN - FLASH>
<DVN - SDRAM>
D-a D-b

D-a 1/2

10.7 DVD CORE UNIT(2/2)

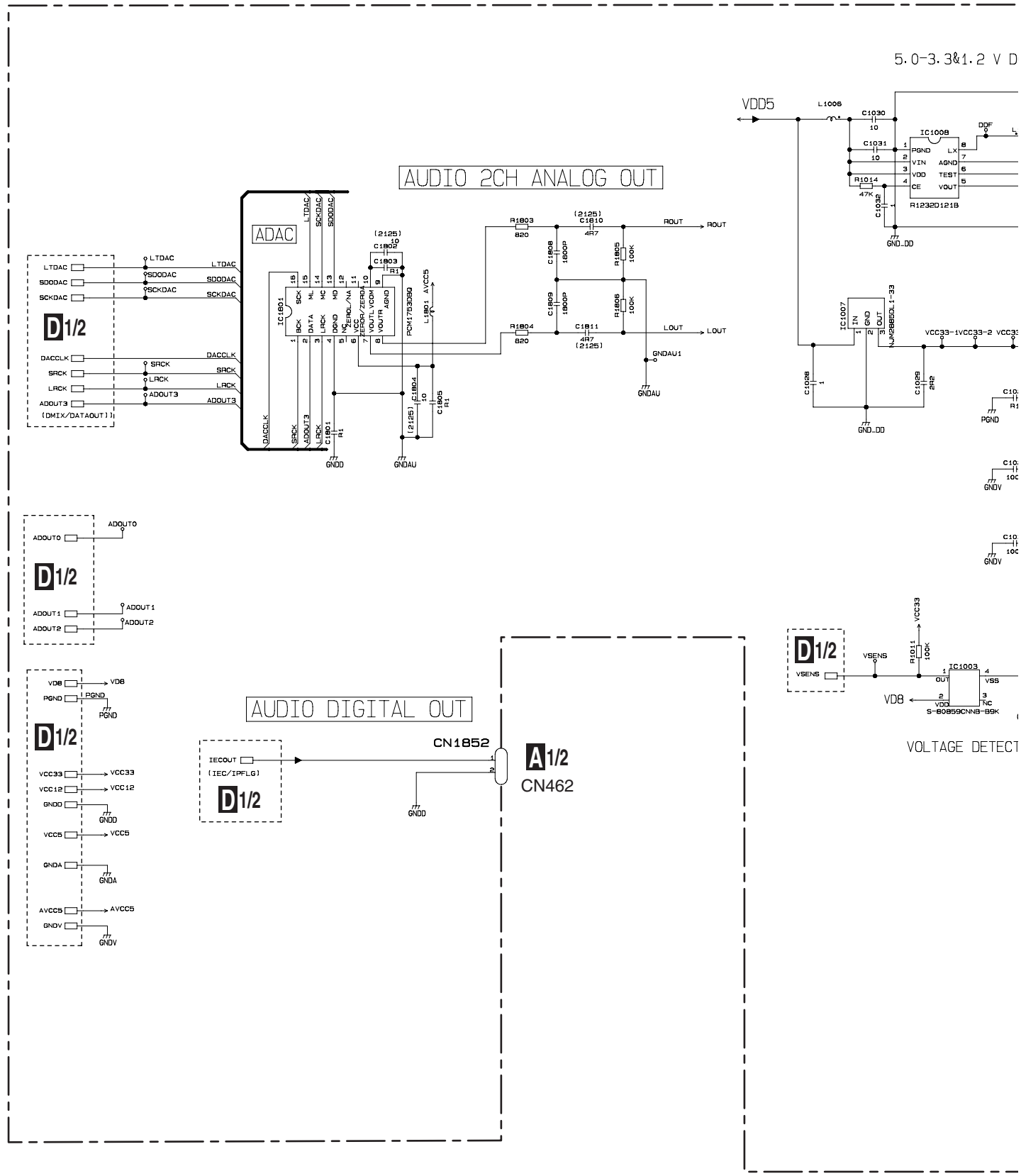

D2/2 DVD CORE UNIT(2/2)

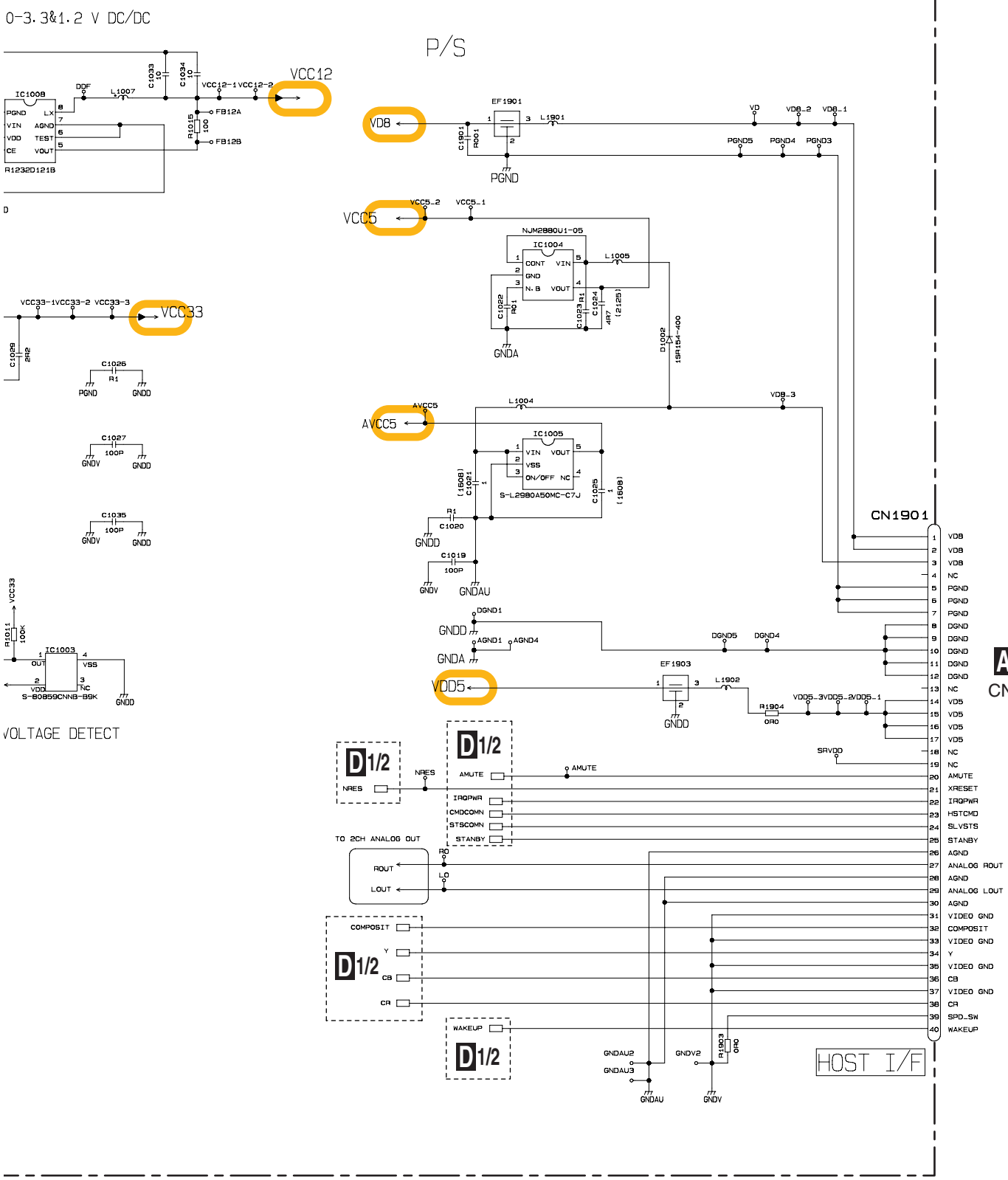

10.8 COMPOUND UNIT(A) AND COMPOUND UNIT(B)

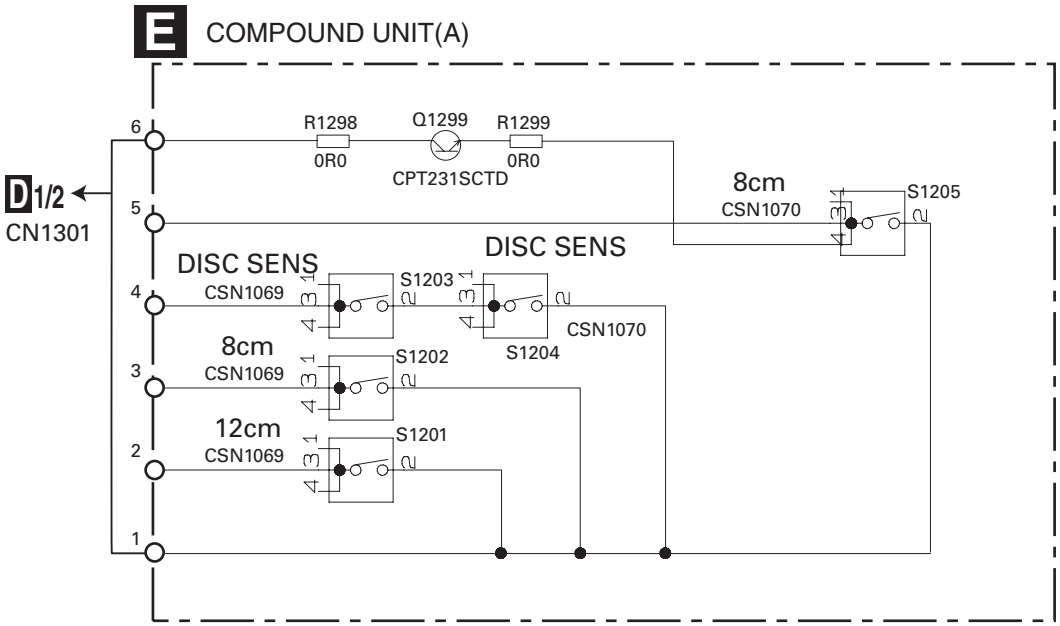

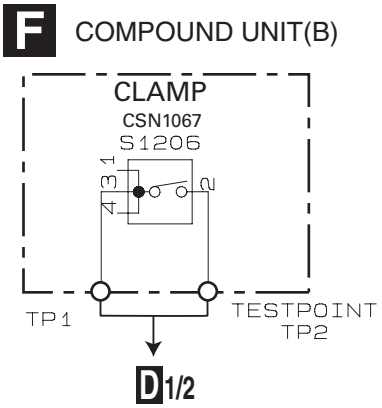

E F

10.9 RCA PCB

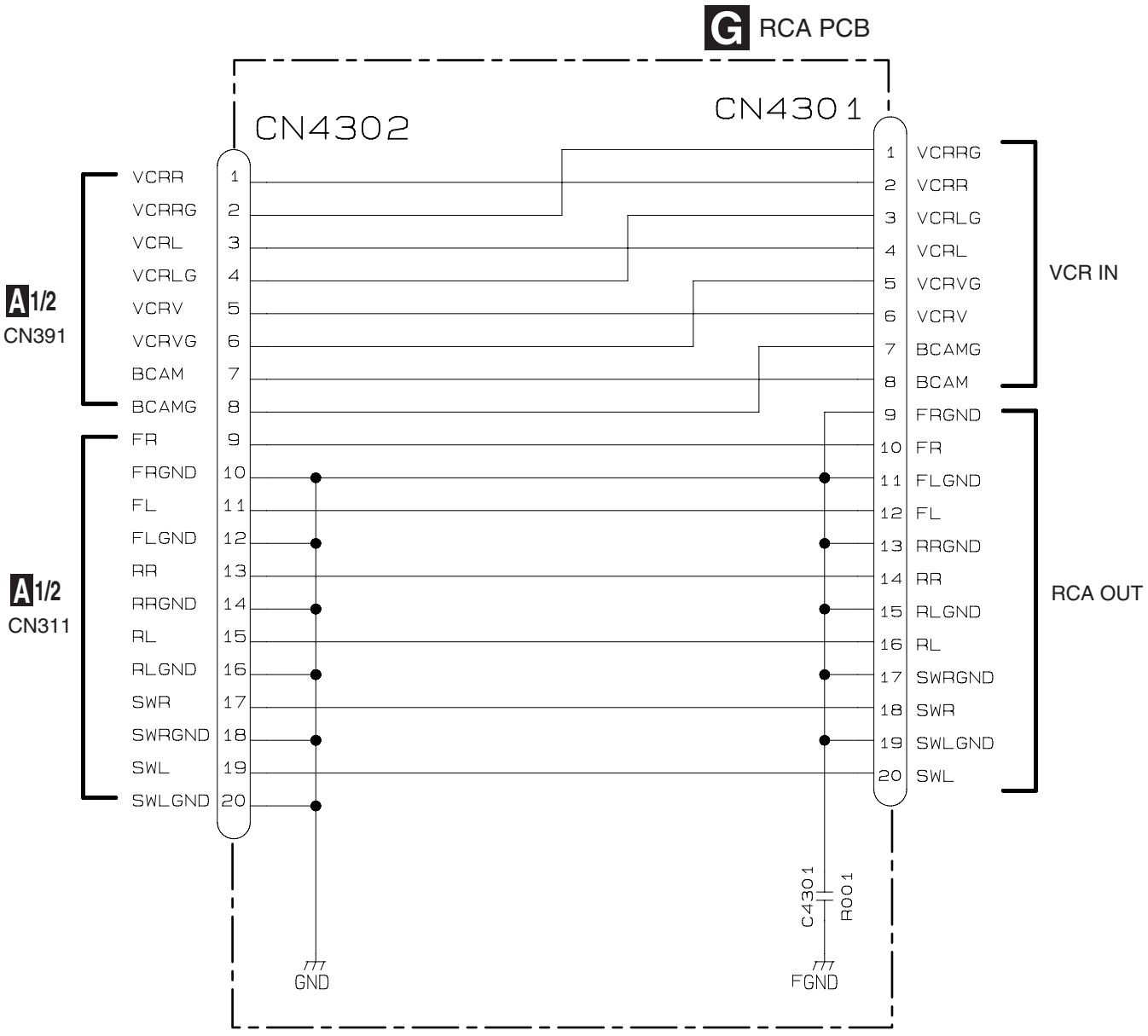

OPT/RCA UNIT
Consists of RCA PCB OPT PCB

10.10 UPPER PCB

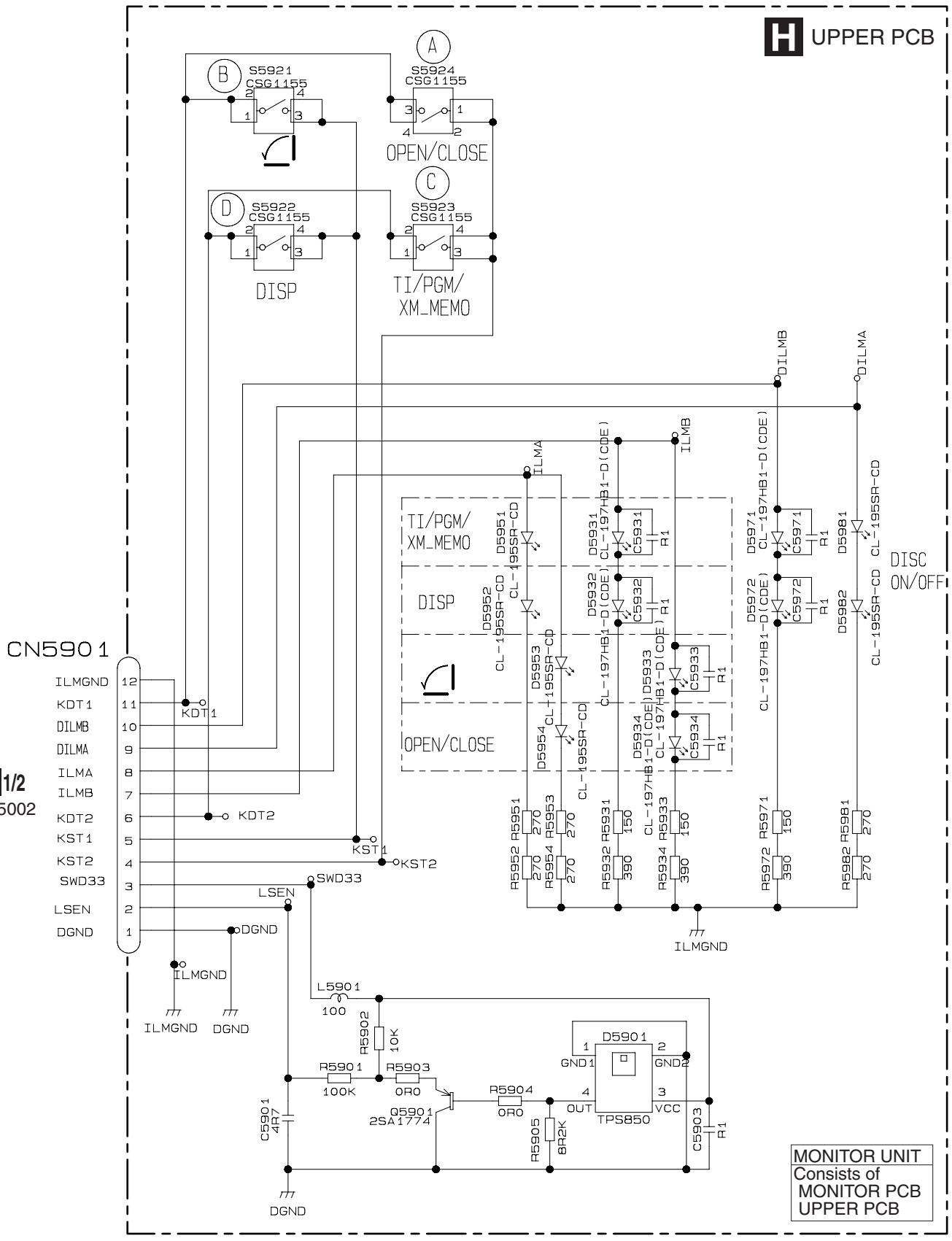

10.11 OPT PCB

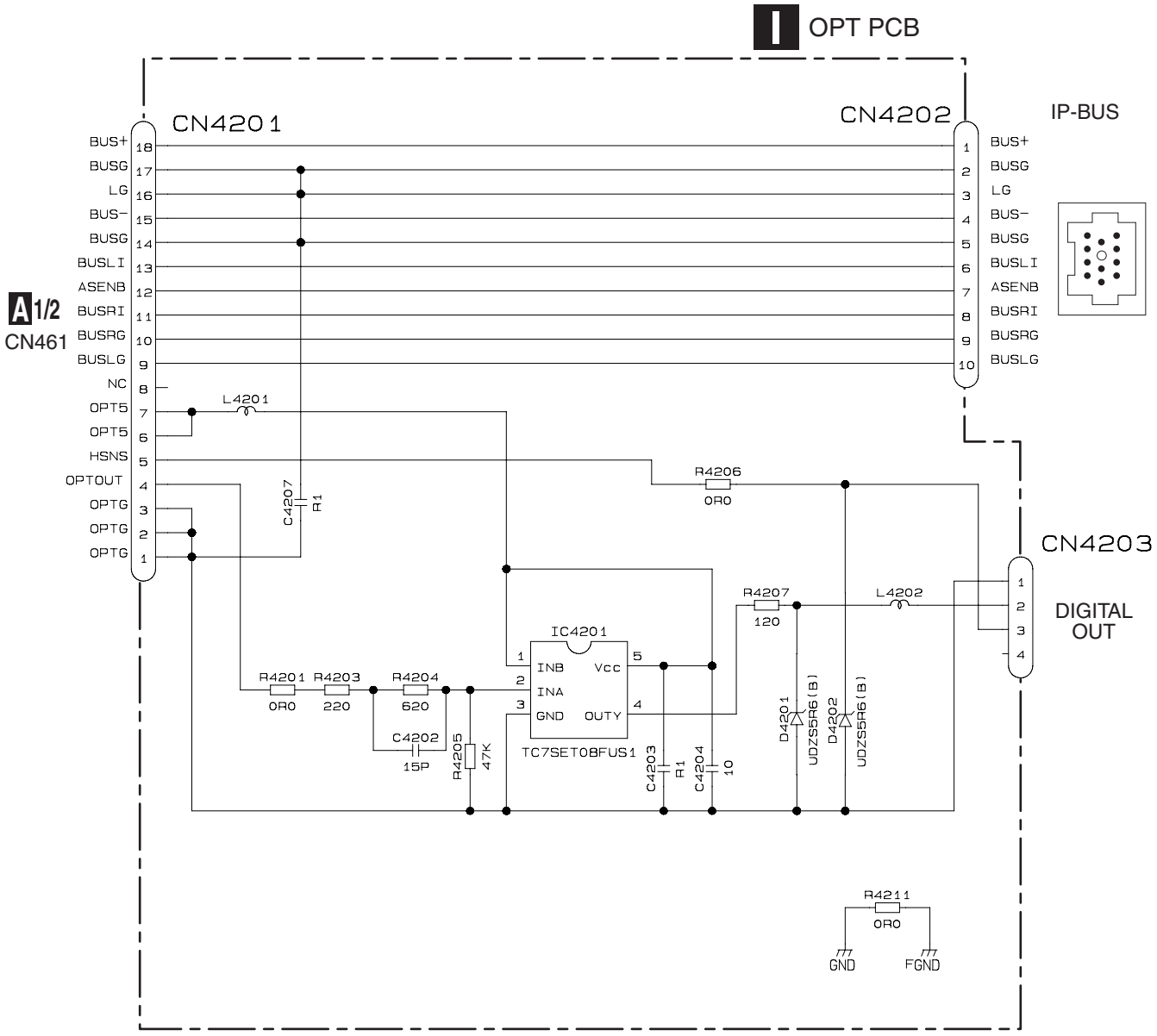
I OPT PCB
CN4201
CN4202
IP-BUS
BUS+ 18
BUSG 17
LG 16
BUS− 15
BUSG 14
BUSLI 13
ASENB 12
BUSRI 11
BUSRG 10
BUSLG 9
NC 8
OPT5 7
OPT5 6
HSNS 5
OPTOUT 4
OPTG 3
OPTG 2
OPTG 1
A 1/2
CN461
1 BUS+
2 BUSG
3 LG
4 BUS−
5 BUSG
6 BUSLI
7 ASENB
8 BUSRI
9 BUSRG
10 BUSLG
L4201
C4207
R1
R4206
0R0
CN4203
DIGITAL OUT
R4207
120
L4202
IC4201
INB
INA
GND
Vcc
OUTY
TC7SET08FUS1
R4201
0R0
R4203
220
R4204
620
C4202
15P
R4205
47K
C4203
R1
C4204
10
D4201
UDZS5R6(B)
D4202
UDZS5R6(B)
R4211
0R0
GND
FGND
OPT/RCA UNIT
Consists of
RCA PCB
OPT PCB

10.12 MAIN PCB UNIT(SERVICE), SWITCH PCB UNIT AND VOLUME PCB UNIT

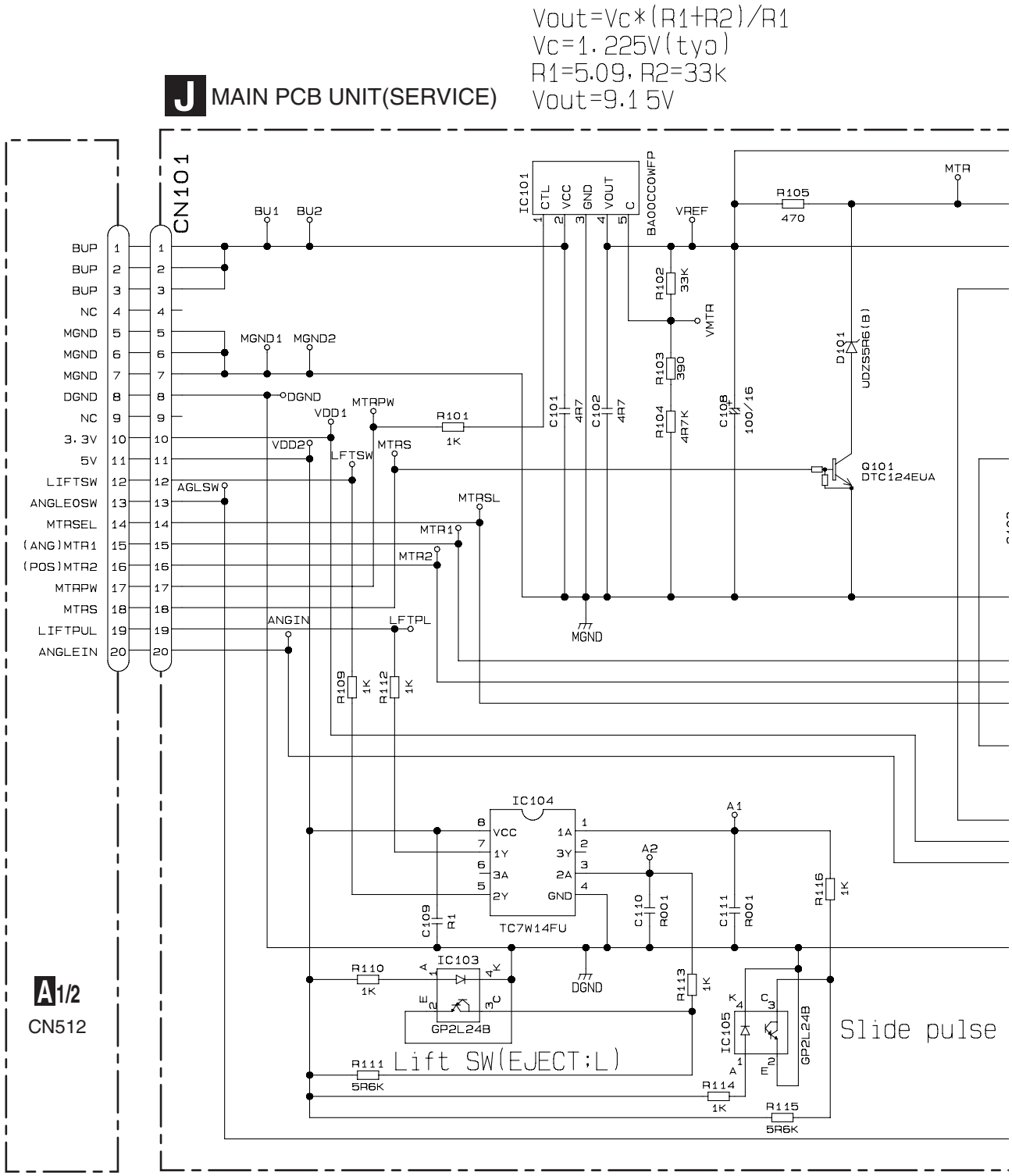

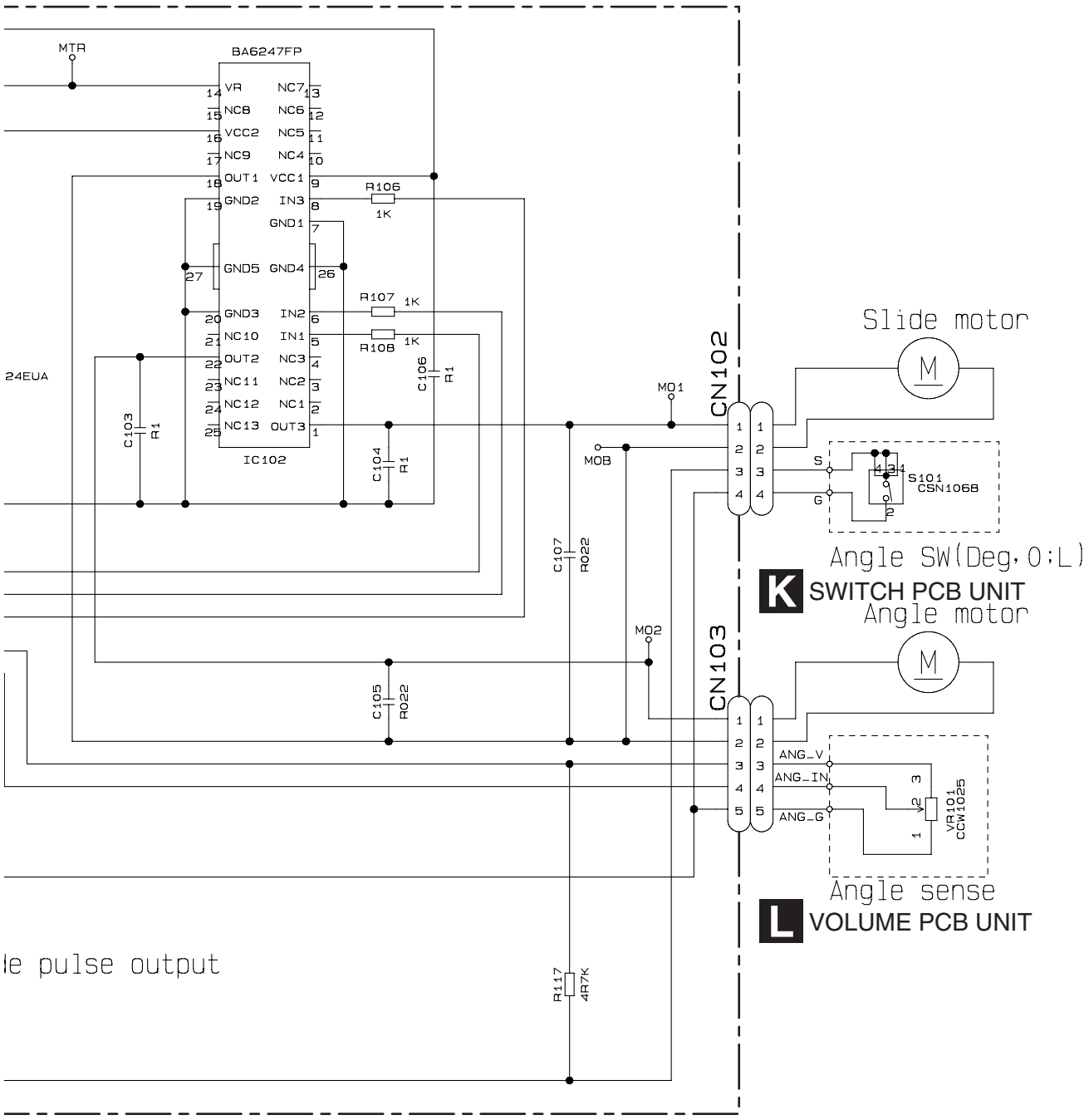
MTR
BA6247FP
VR
NC8
VCC2
NC9
OUT1
GND2
GND1
GND5
GND4
GND3
NC10
OUT2
NC11
NC12
NC13
NC7
NC6
NC5
NC4
VCC1
IN3
IN2
IN1
NC3
NC2
NC1
OUT3
IC102
R106
1K
R107
1K
R108
1K
C103
R1
C104
R1
C106
R1
24EUA
MO1
MOB
MO2
CN102
CN103
Slide motor
M
S
G
S101
CSN1068
Angle SW(Deg, O:L)
K SWITCH PCB UNIT
Angle motor
M
ANG_V
ANG_IN
ANG_G
VR101
CCW1025
Angle sense
L VOLUME PCB UNIT
C107
R022
C105
R022
R117
4R7K
le pulse output

10.13 WAVEFORMS

● DVD Core Unit

Note:1. The encircled number denote measuring points in the circuit diagram.
2. Reference voltage: 1.65 V(TD1,FD1)(=VHALF)
2.2 V(RF)(=VREF)
In the waveform, it is seeing on the GND standard.
Offset of 1.65 V or 2.2 V is put in.

1 RF
2 TD1
3 A+, A-
4 B+, B-
5 FD1

①RF 0.2 V/div(AC) 0.1 μs/div
CDRF(x 4 CLV)

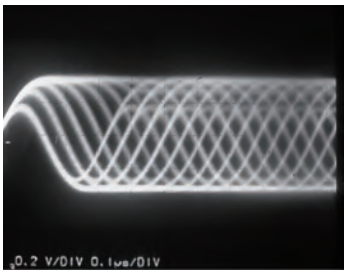

①RF 0.2 V/div(AC) 50 ns/div
CDRF(x 20 CAV Inner peripheral)

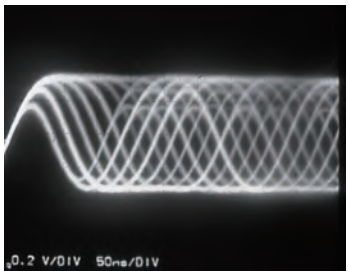

①RF 0.2 V/div(AC) 50 ns/div
CDRF(x 20 CAV Peripheral)

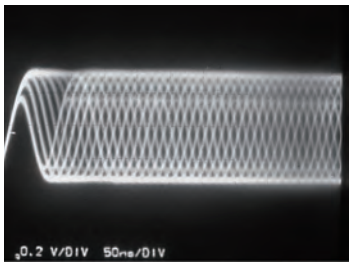

①RF 0.2 V/div(AC) 50 ns/div
DVDRF(x 1.3 ZCAV)

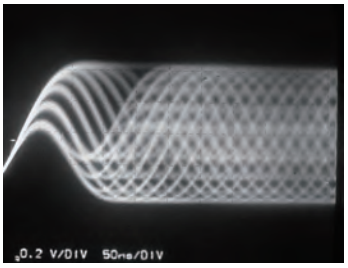

①RF 0.2 V/div(AC) 50 ns/div
DVDRF(x 5 CAV Inner peripheral)

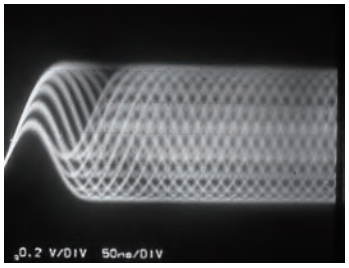

①RF 0.2 V/div(AC) 50 ns/div
DVDRF(x 5 CAV Peripheral)

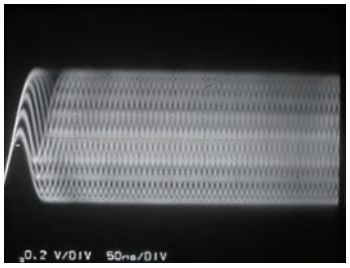

①RF 0.5 V/div 100 μs/div
DVDRF(BD1 mm)

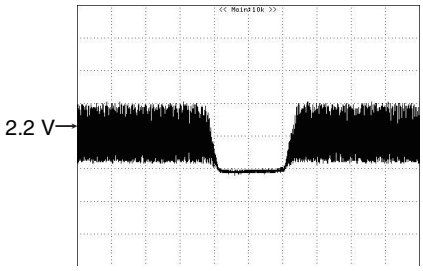

②TD1 0.1 V/div 100 μs/div
Interval FWD

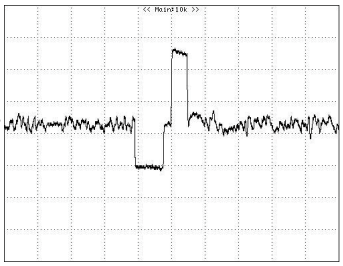

②TD1 0.1 V/div 100 μs/div
Interval REV

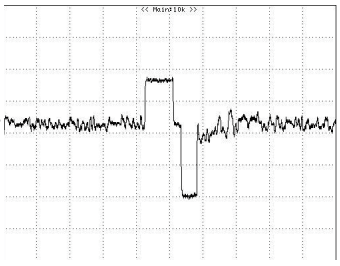

②TD1 0.1 V/div 500 μs/div Multi 32 FWD 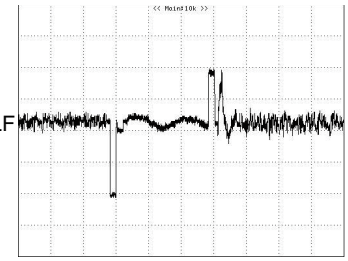	②TD1 0.1 V/div 500 μs/div Multi 32 REV 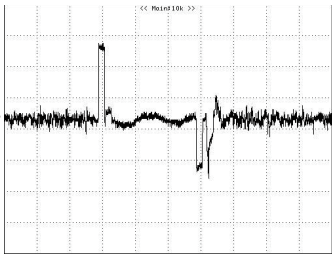	②CH1 : TD1 0.5 V/div 10 ms/div ③CH2 : A^+-A^- 10.0 V/div 10 ms/div (LPF of the oscilloscope is set to 10 kHz) ④CH3 : B^+-B^- 10.0 V/div 10 ms/div (LPF of the oscilloscope is set to 10 kHz) Traverse 900 FWD(Short) 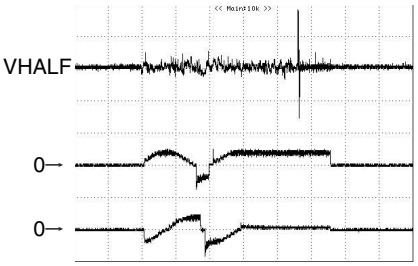
②CH1 : TD1 0.5 V/div 10 ms/div ③CH2 : A^+-A^- 10.0 V/div 10 ms/div (LPF of the oscilloscope is set to 10 kHz) ④CH3 : B^+-B^- 10.0 V/div 10 ms/div (LPF of the oscilloscope is set to 10 kHz) Traverse 900 REV(Short) 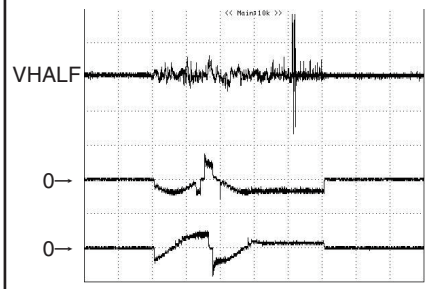	②CH1 : TD1 0.5 V/div 20 ms/div ③CH2 : A^+-A^- 10.0 V/div 20 ms/div (LPF of the oscilloscope is set to 10 kHz) ④CH3 : B^+-B^- 10.0 V/div 20 ms/div (LPF of the oscilloscope is set to 10 kHz) Traverse 5 000 FWD(Long) 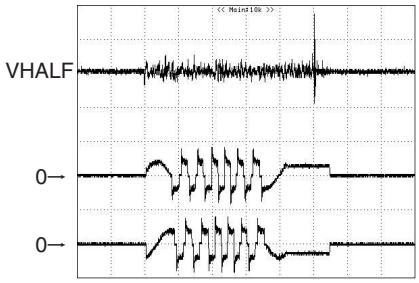	②CH1 : TD1 0.5 V/div 20 ms/div ③CH2 : A^+-A^- 10.0 V/div 20 ms/div (LPF of the oscilloscope is set to 10 kHz) ④CH3 : B^+-B^- 10.0 V/div 20 ms/div (LPF of the oscilloscope is set to 10 kHz) Traverse 5 000 REV(Long) 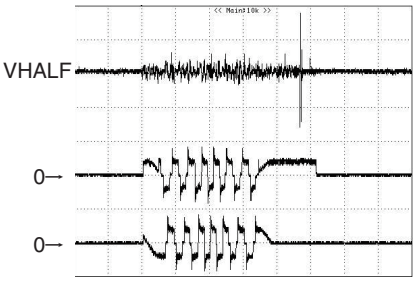
③CH : A^+-A^- 10 V/div 50 ms/div ④CH2 : B^+-B^- ID search Inside → Outside 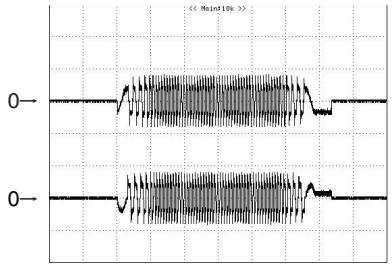	②TD1 0.5 Vdiv 20 ms/div Play TD 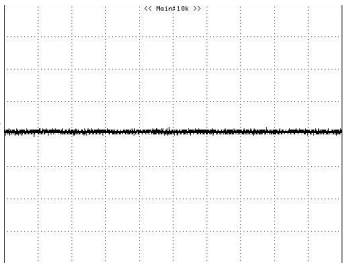	⑤FD1 0.5 V/div 1 ms/div Focus Close 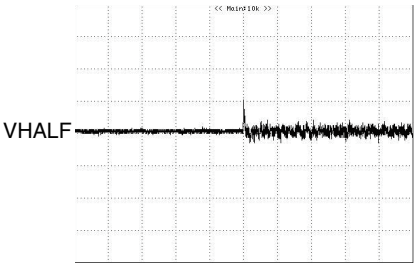
⑤FD1 0.5 V/div 20 ms/div Play FD 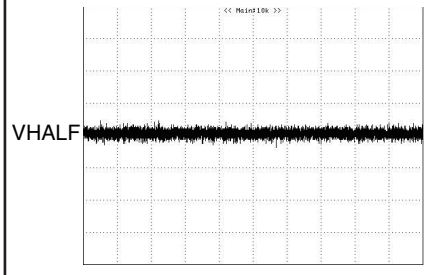	⑤FD1 0.5 V/div 500 μs/div Focus Jump L0→L1 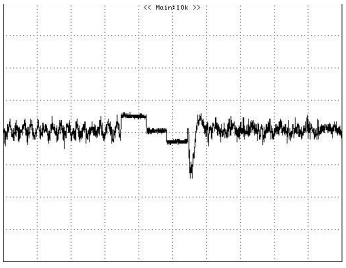	⑤FD1 0.5 V/div 500 μs/div Focus Jump L1→L0 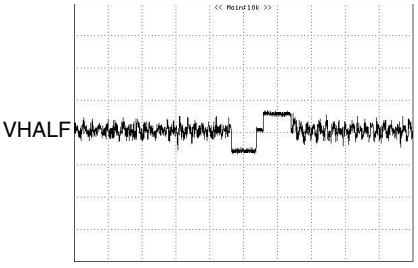

11. PCB CONNECTION DIAGRAM
11.1 MOTHER UNIT

NOTE FOR PCB DIAGRAMS

1. The parts mounted on this PCB include all necessary parts for several destination.
   For further information for respective destinations, be sure to check with the schematic diagram.
2. Viewpoint of PCB diagrams

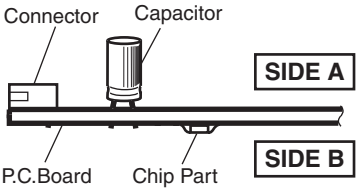

A MOTHER UNIT

⚠ FU 521	(A,23,92)	Fuse 2 A	CEK1257
⚠ FU 522	(A,19,91)	Fuse 200 mA	CEK1247
⚠ FU 523	(A,16,91)	Fuse 200 mA	CEK1247
⚠ FU 961	(A,134,86)	Fuse 630 mA	CEK1252
⚠ FU 971	(A,39,5)	Fuse 2 A	CEK1257
⚠ FU 972	(A,43,24)	Fuse 2 A	CEK1257
⚠ FU 973	(A,15,30)	Fuse 2 A	CEK1257

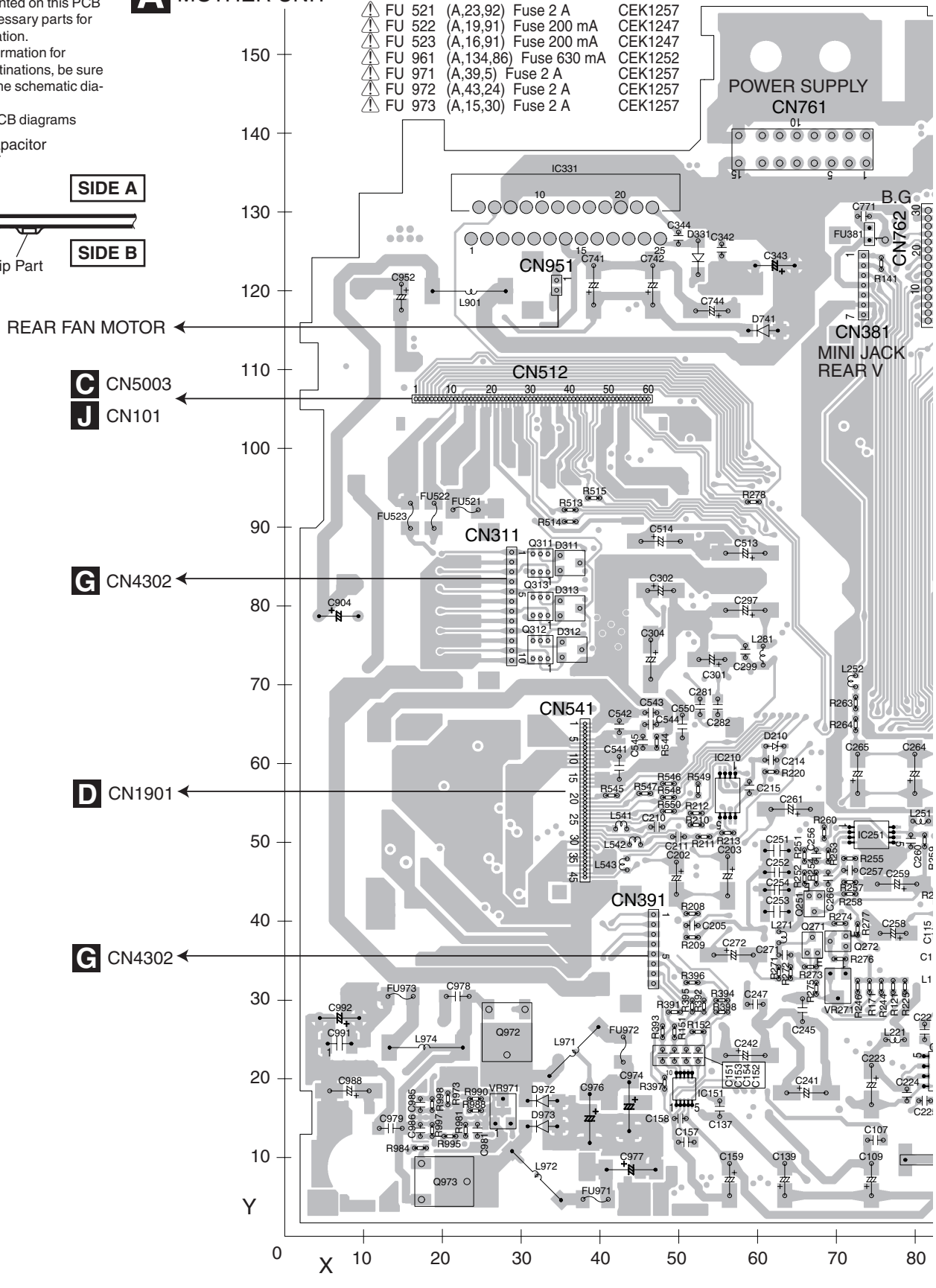

SIDE A

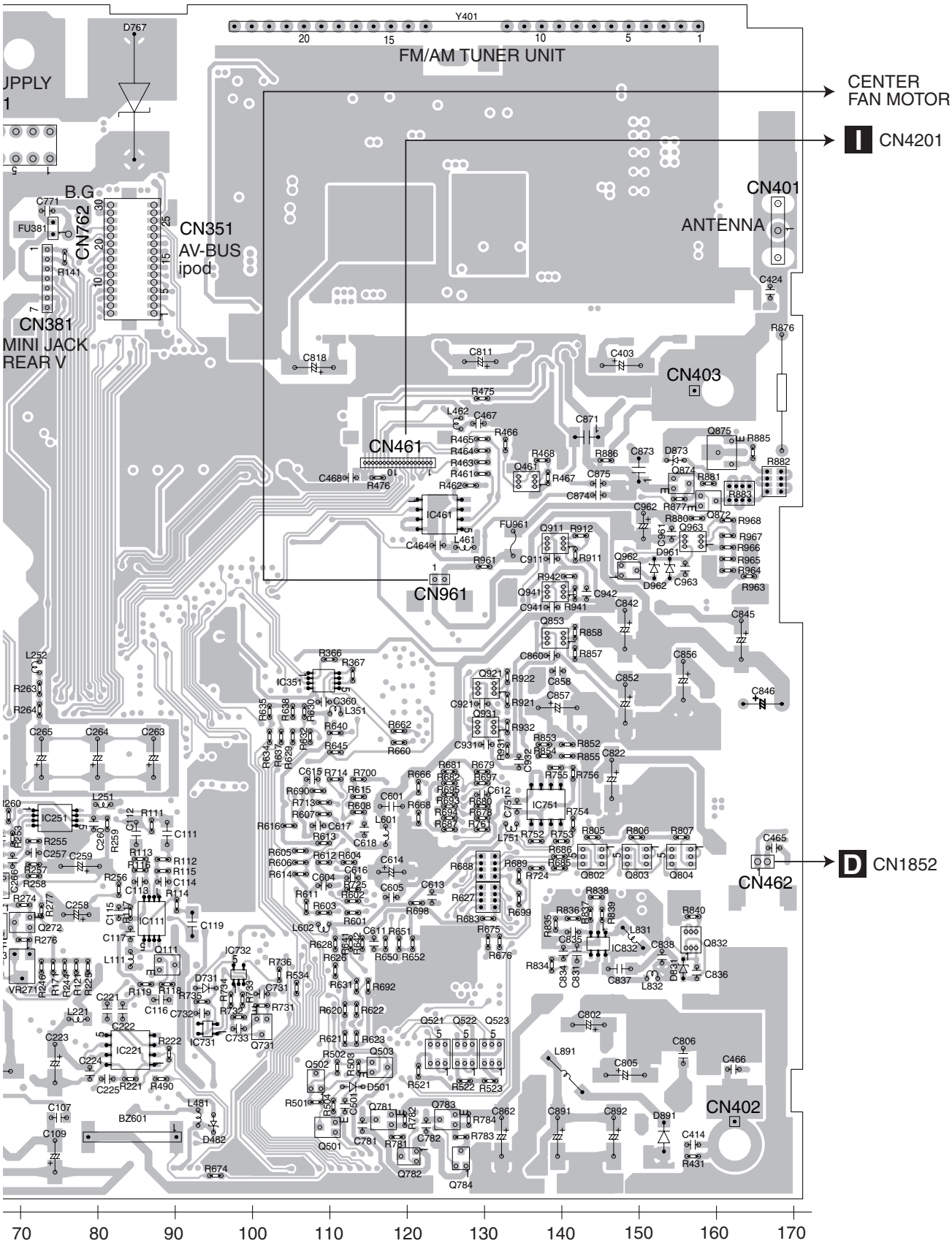
FM/AM TUNER UNIT
Y401
CENTER FAN MOTOR
I CN4201
CN401
ANTENNA
CN351 AV-BUS ipod
CN762
CN381 MINI JACK REAR V
B.G
CN403
CN461
CN961
CN462
D CN1852
CN402
FRONT
70 80 90 100 110 120 130 140 150 160 170

A MOTHER UNIT

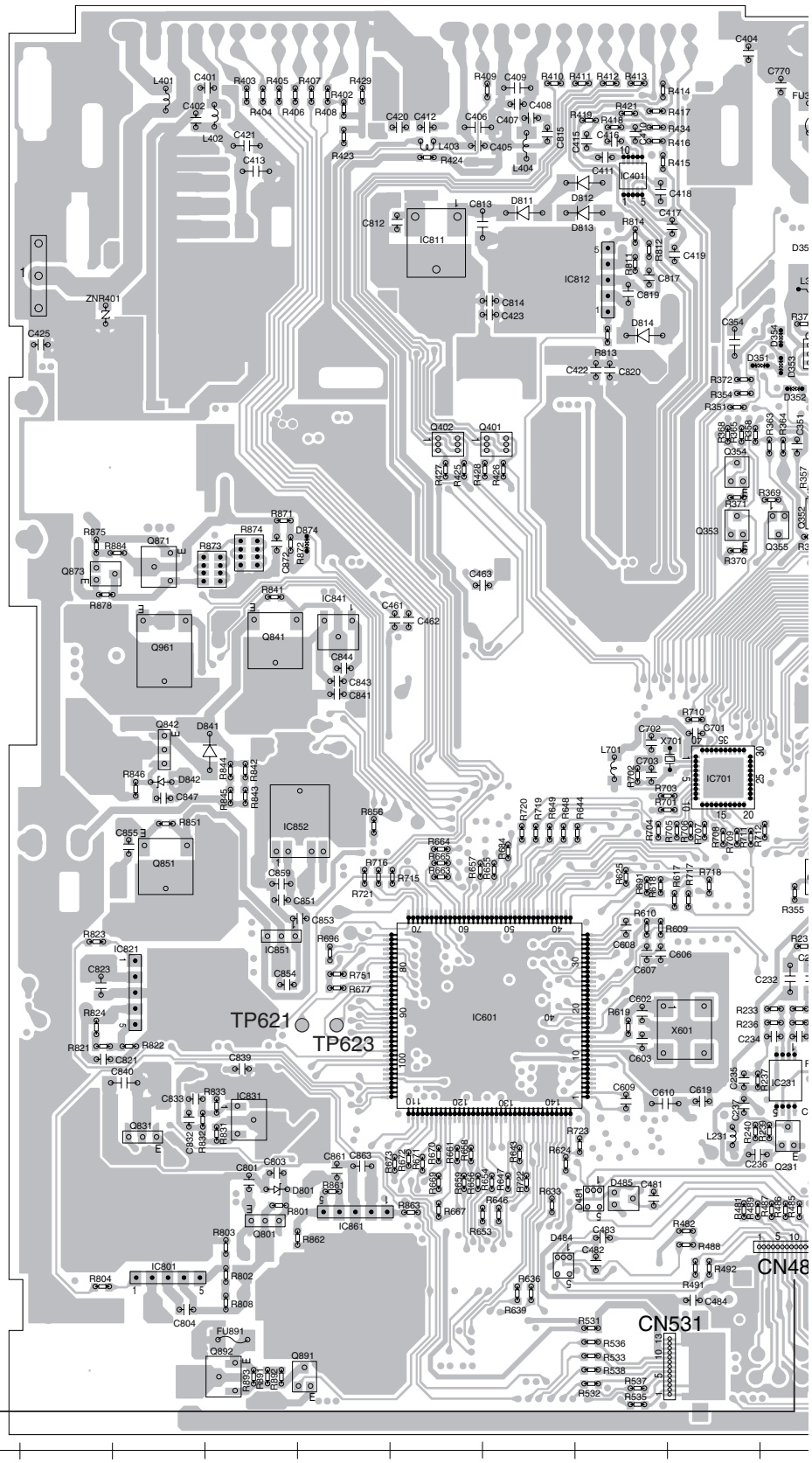

SIDE B

⚠ FU 311 (B,18,74) Fuse 3.15 A CEK1259
⚠ FU 351 (B,85,144) Fuse 3.15 A CEK1259
⚠ FU 352 (B,79,144) Fuse 3.15 A CEK1259
⚠ FU 761 (B,68,146) Fuse 3.15 A CEK1259
⚠ FU 891 (B,147,12) Fuse 1.25 A CEK1255
⚠ FU 901 (B,8,92) Fuse 1.25 A CEK1255
⚠ FU 951 (B,13,113) Fuse 630 mA CEK1252

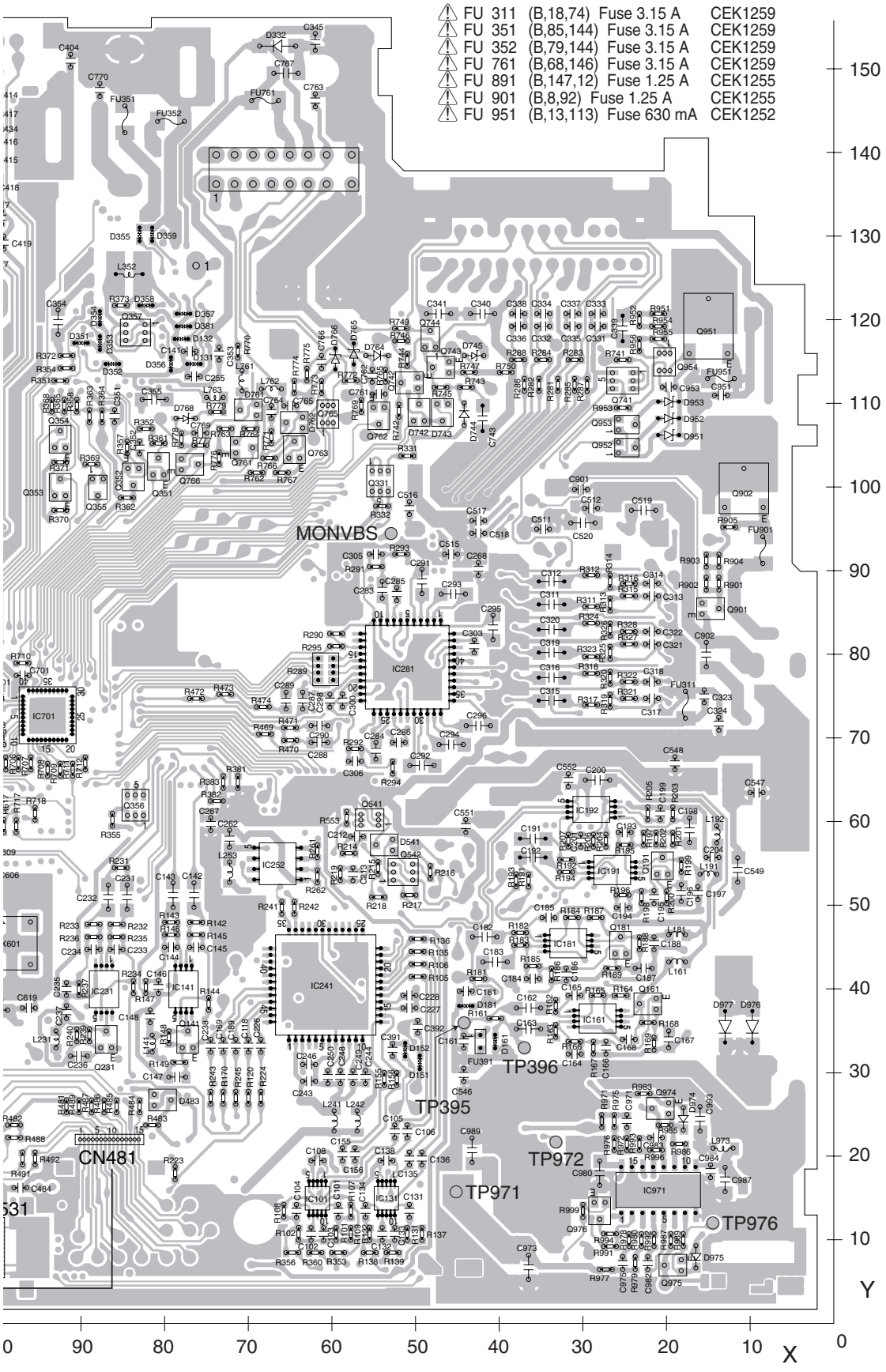

11.2 KEYBOARD UNIT

B KEYBOARD UNIT

SIDE A

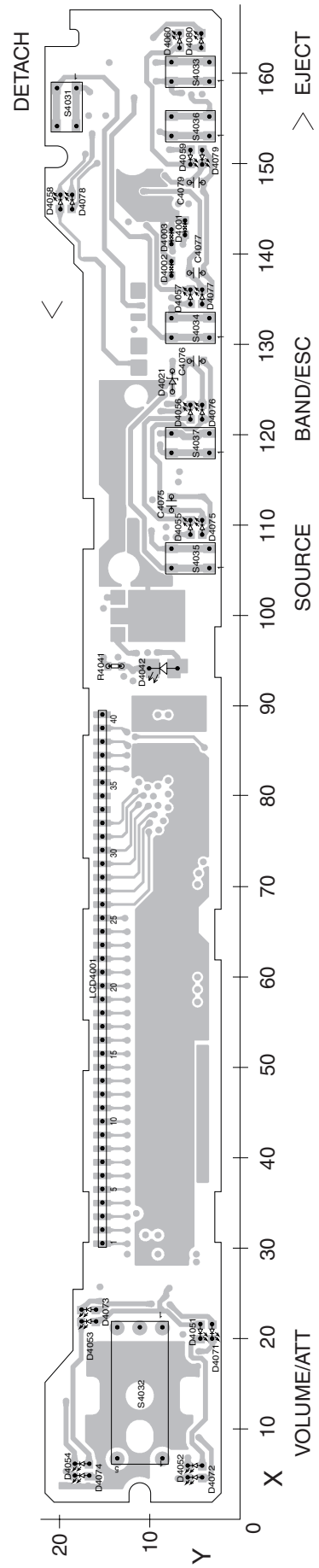

B

B KEYBOARD UNIT

SIDE B

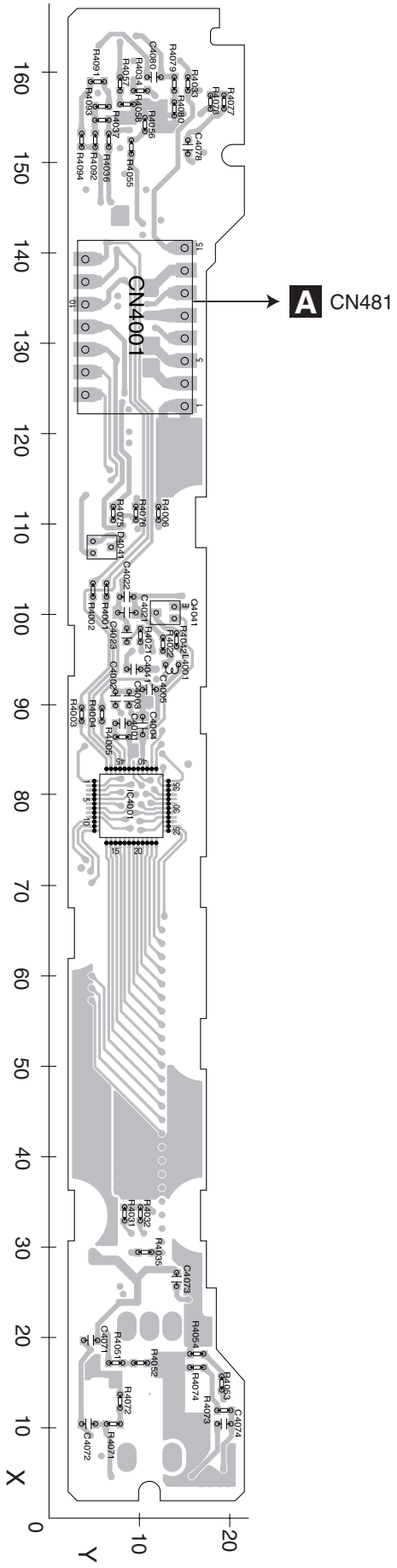

11.3 MONITOR PCB

C MONITOR PCB

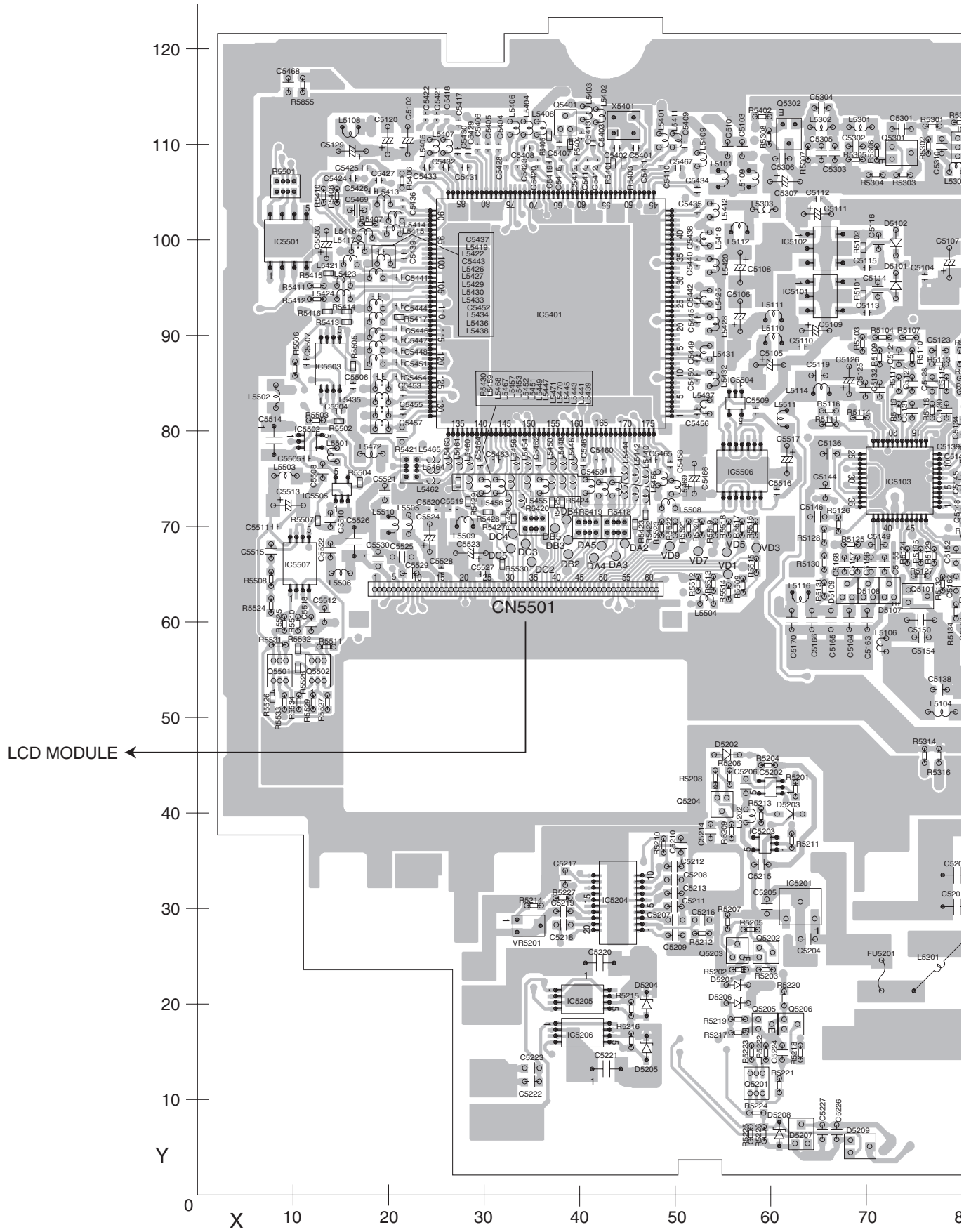

C

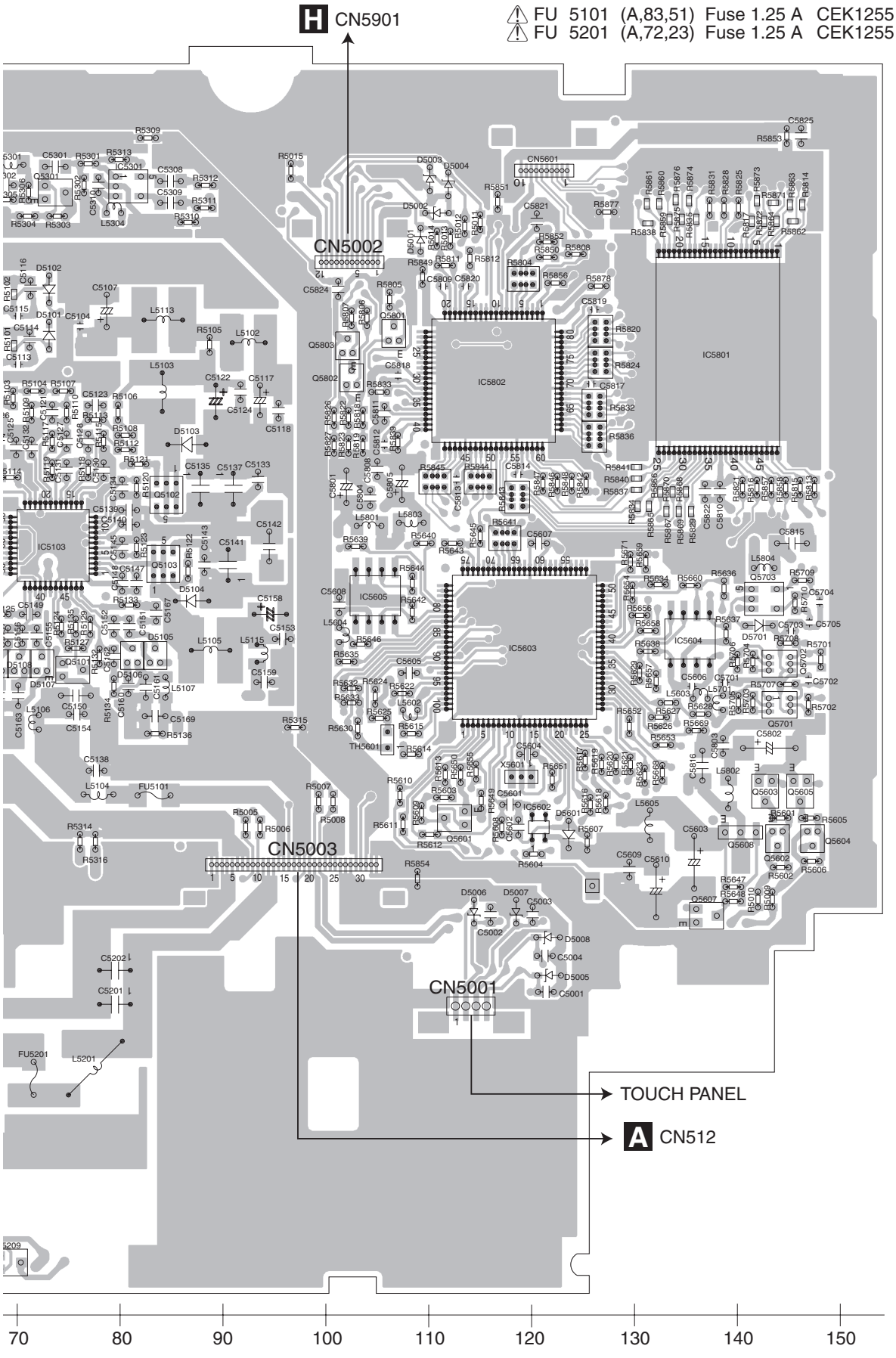
H CN5901
FU 5101 (A,83,51) Fuse 1.25 A CEK1255
FU 5201 (A,72,23) Fuse 1.25 A CEK1255
CN5002
CN5003
CN5001
IC5801
IC5802
IC5603
IC5103
IC5605
IC5604
TOUCH PANEL
A CN512

C MONITOR PCB

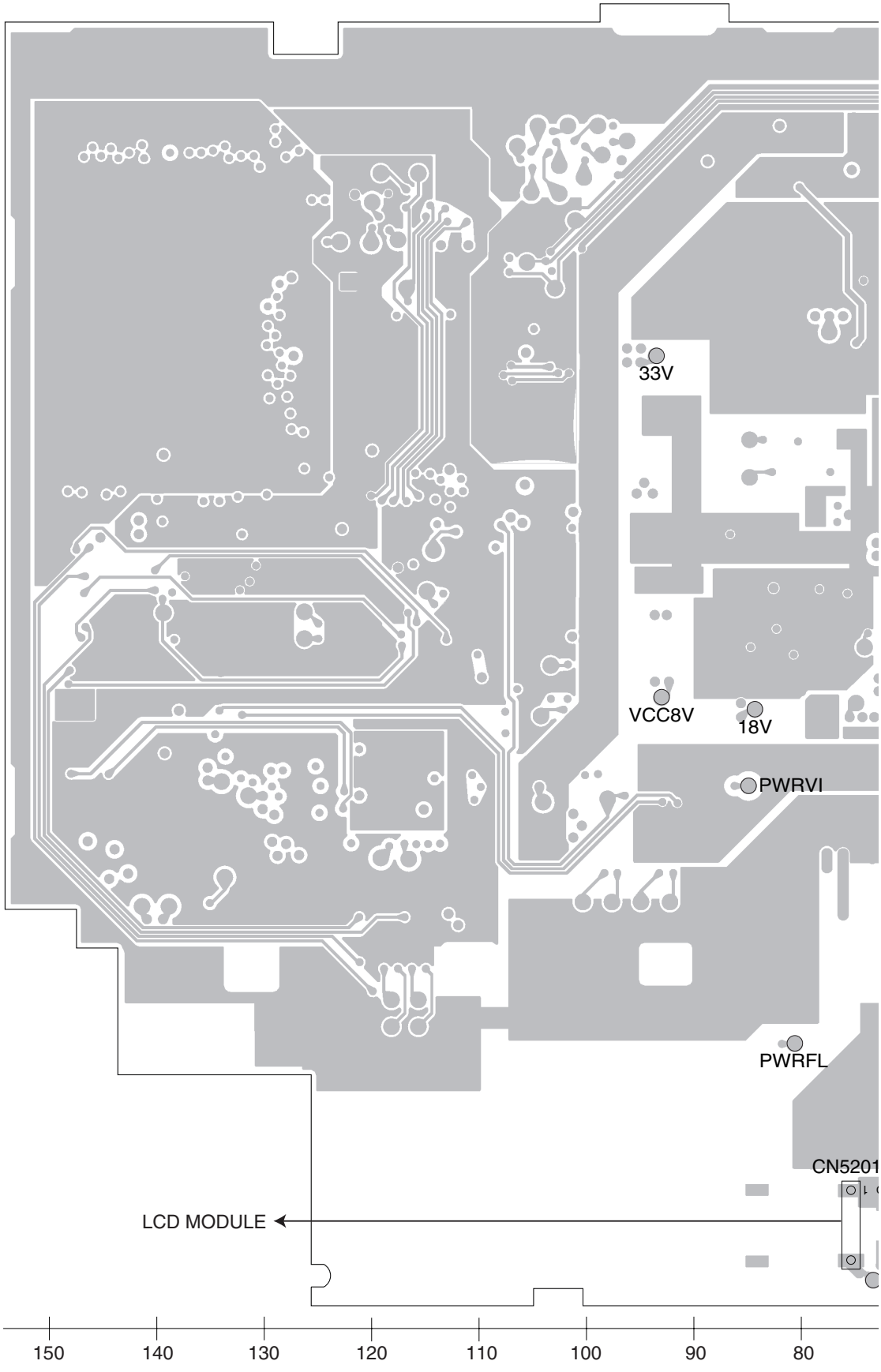

SIDE B

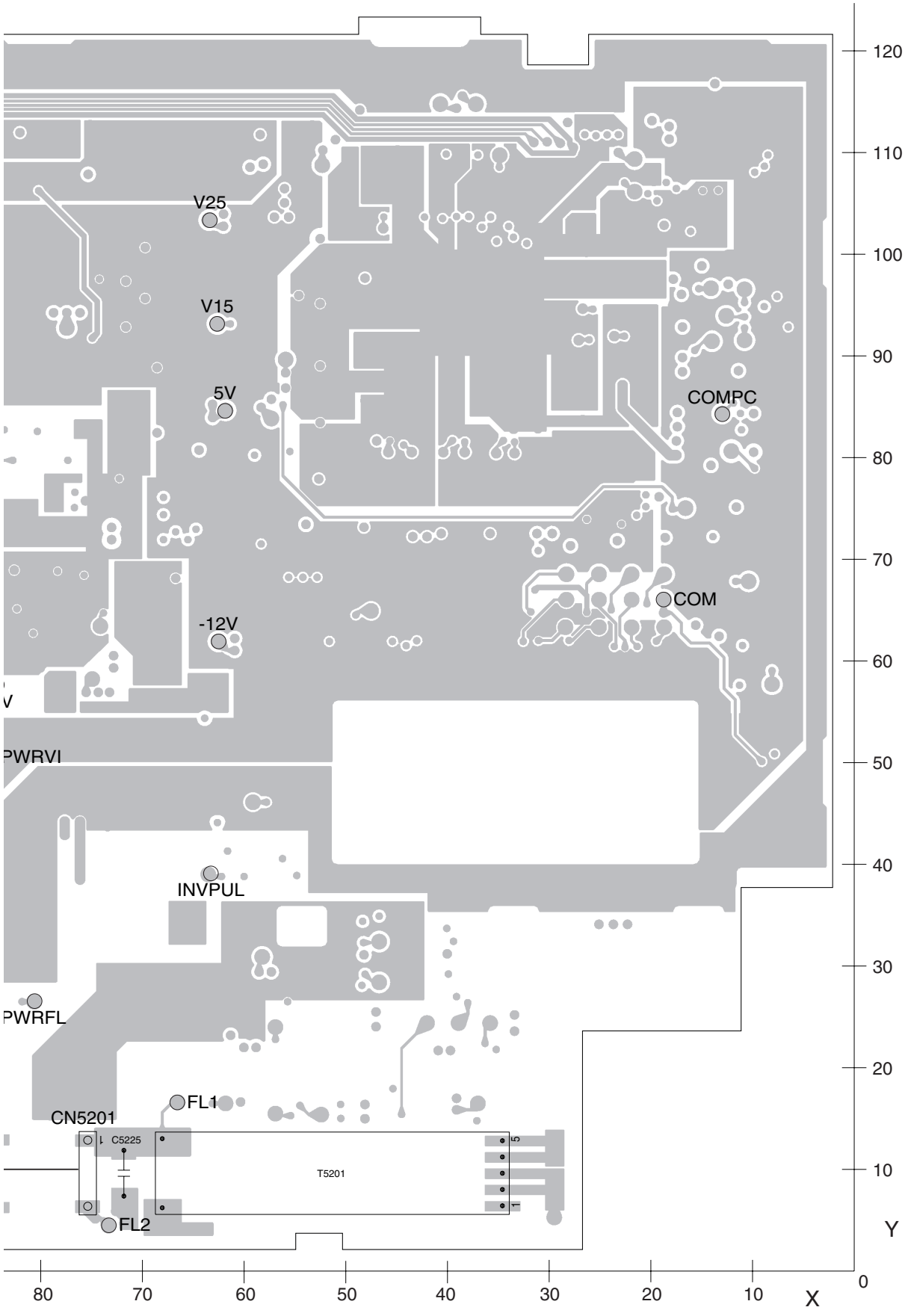
V25
V15
5V
COMPC
COM
-12V
PWRVI
INVPUL
PWRFL
FL1
CN5201
C5225
T5201
FL2
120
110
100
90
80
70
60
50
40
30
20
10
0
Y
80
70
60
50
40
30
20
10
X

11.4 DVD CORE UNIT

D DVD CORE UNIT

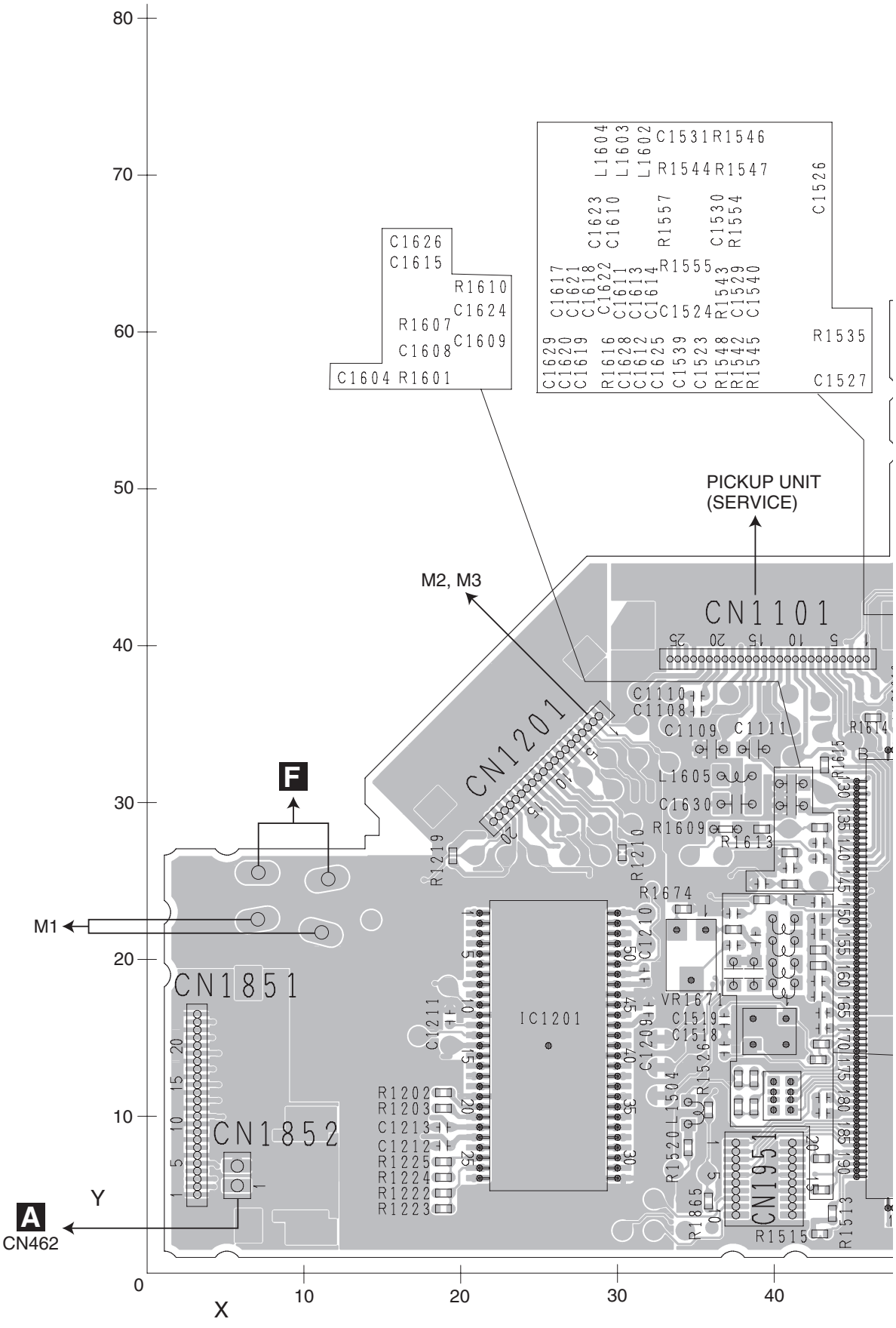

D

SIDE A

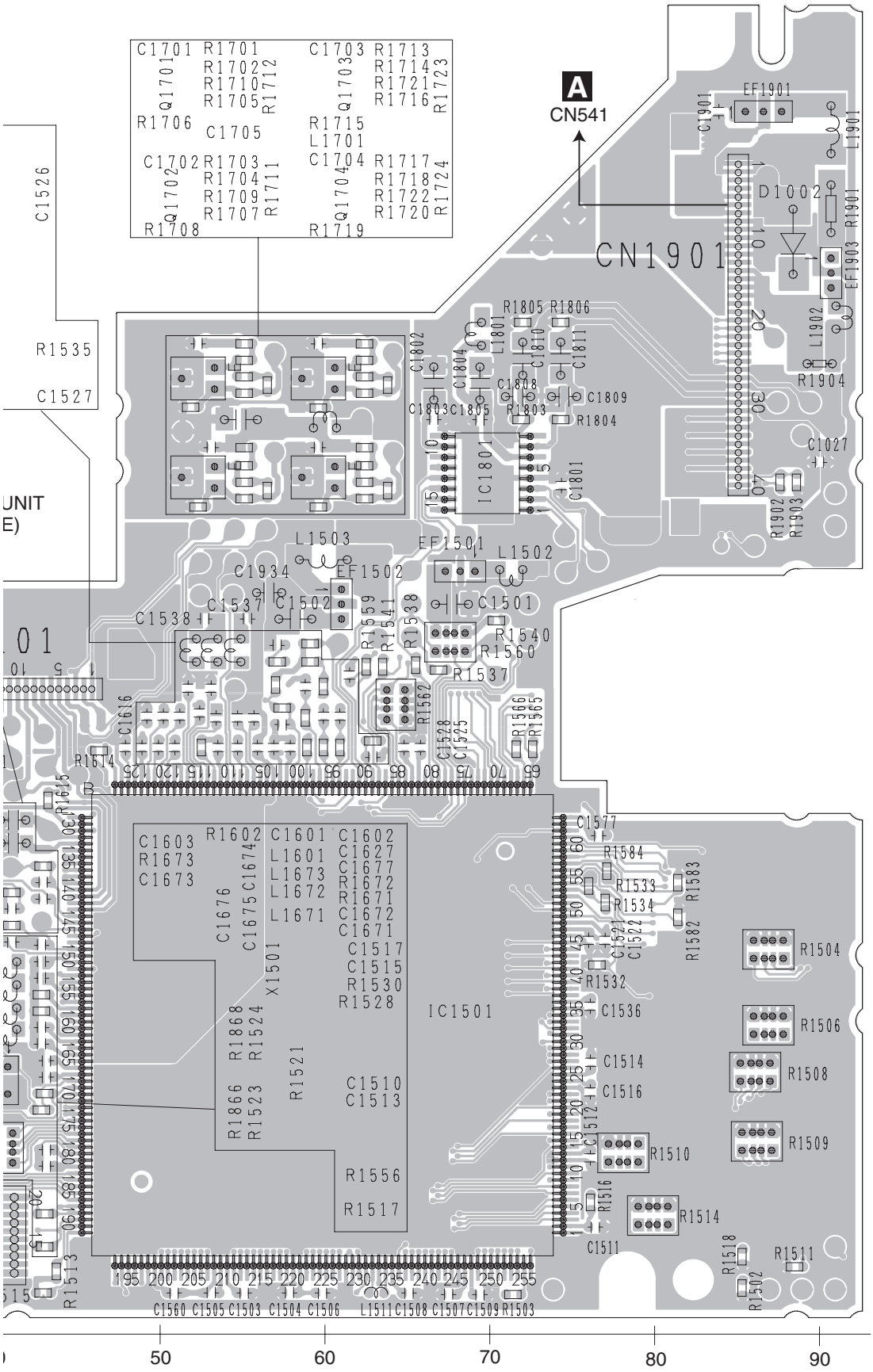

A
CN541
CN1901
IC1801
IC1501
X1501
EF1901
EF1903
EF1501
EF1502
D1002
C1526
R1535
C1527
UNIT
E)
50
60
70
80
90

D

D DVD CORE UNIT

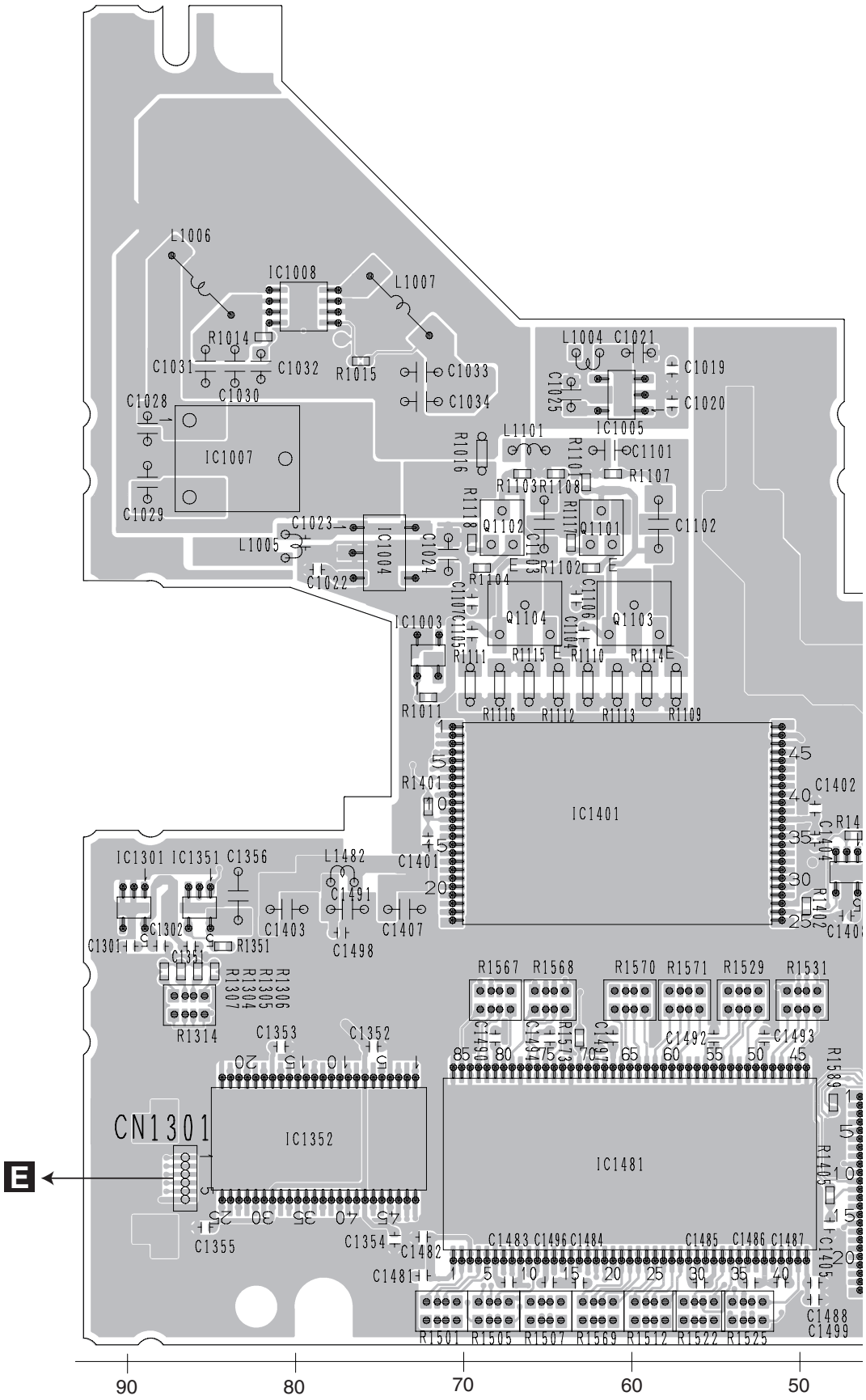

SIDE B

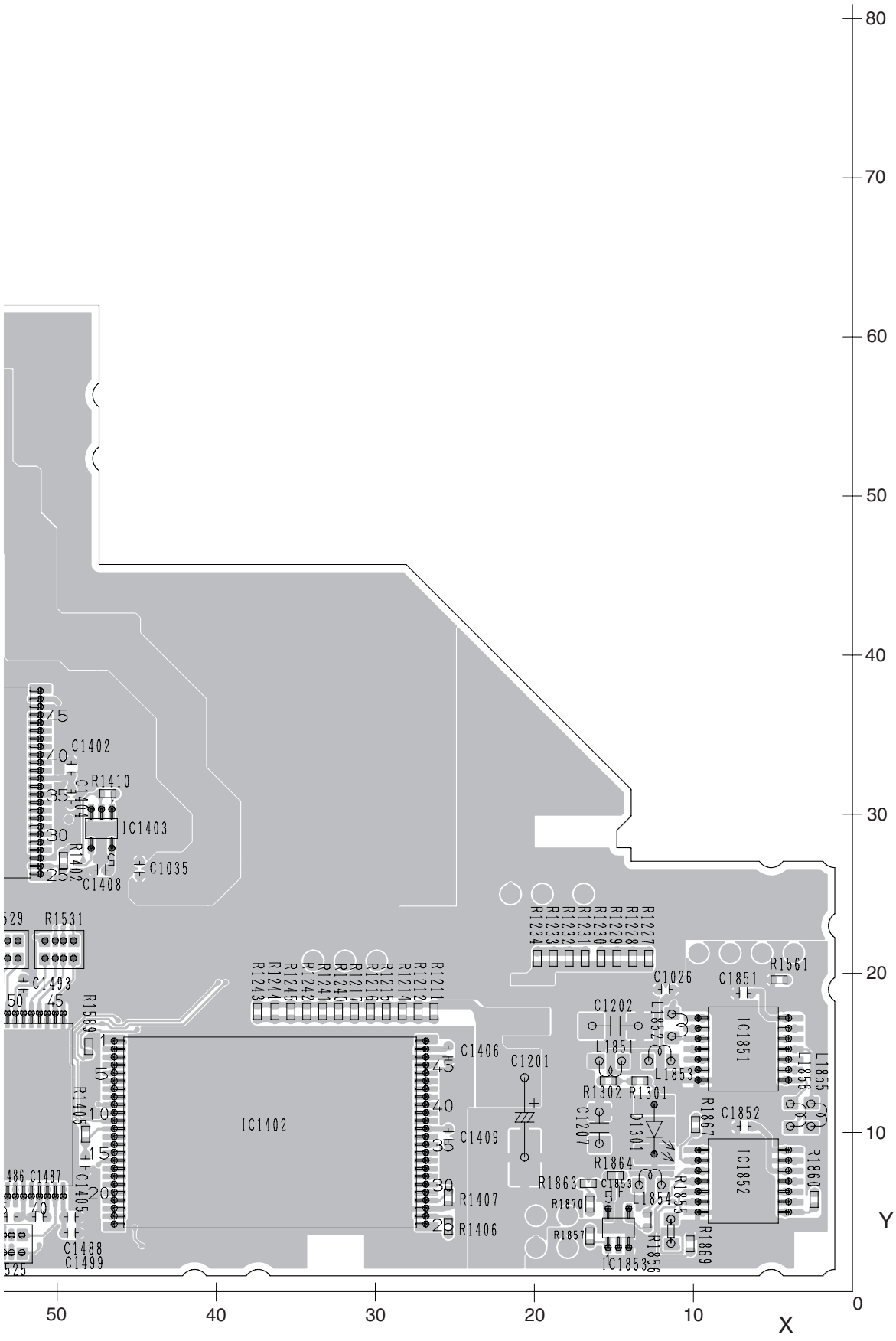

80
70
60
50
40
30
20
10
0
Y
X
50
40
30
20
10
C1402
R1410
C1404
IC1403
R1402
C1408
C1035
R1531
C1493
R1589
R1405
C1405
C1487
C1488
C1499
IC1402
C1406
C1409
R1407
R1406
R1243
R1244
R1245
R1242
R1241
R1240
R1217
R1216
R1215
R1214
R1212
R1211
R1234
R1233
R1232
R1231
R1230
R1229
R1228
R1227
C1201
C1202
L1851
L1852
L1853
R1302
R1301
C1207
D1301
R1864
R1863
C1853
L1854
R1870
R1857
IC1853
R1856
R1855
R1869
R1867
C1852
IC1852
R1860
C1026
C1851
R1561
IC1851
L1856
L1855

D

11.5 COMPOUND UNIT(A) AND COMPOUND UNIT(B)

E COMPOUND UNIT(A)

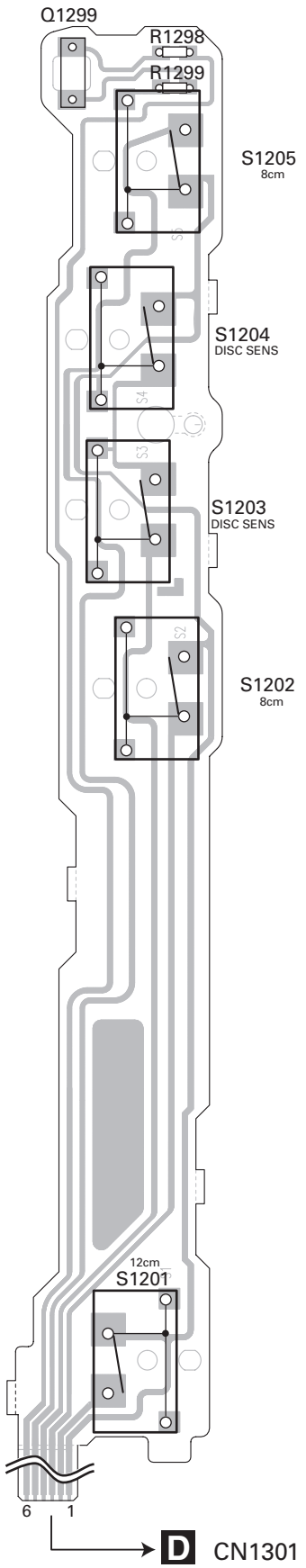

F COMPOUND UNIT(B)

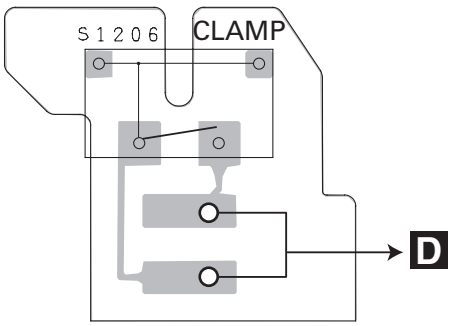

E F

11.6 RCA PCB

G RCA PCB

SIDE A

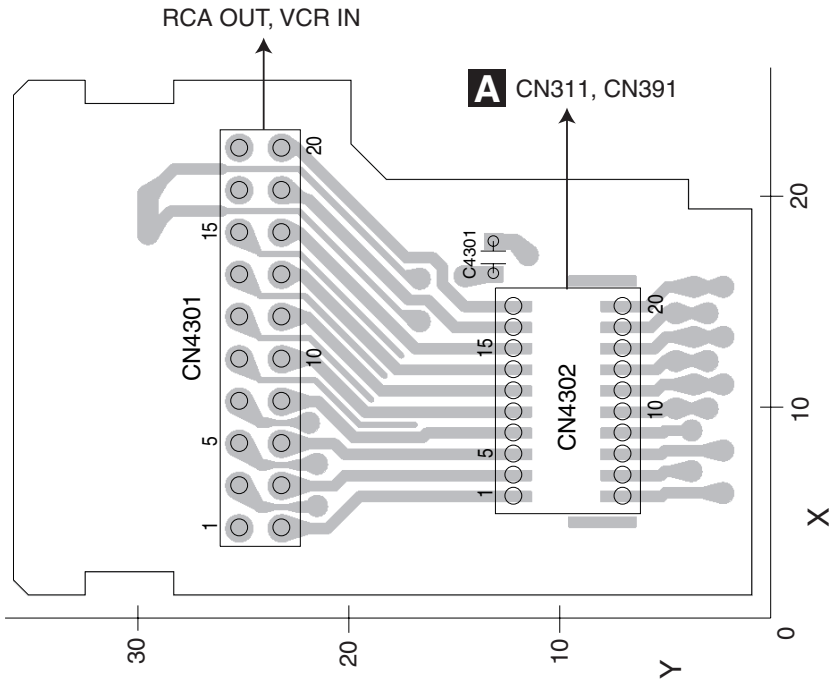

G RCA PCB

SIDE B

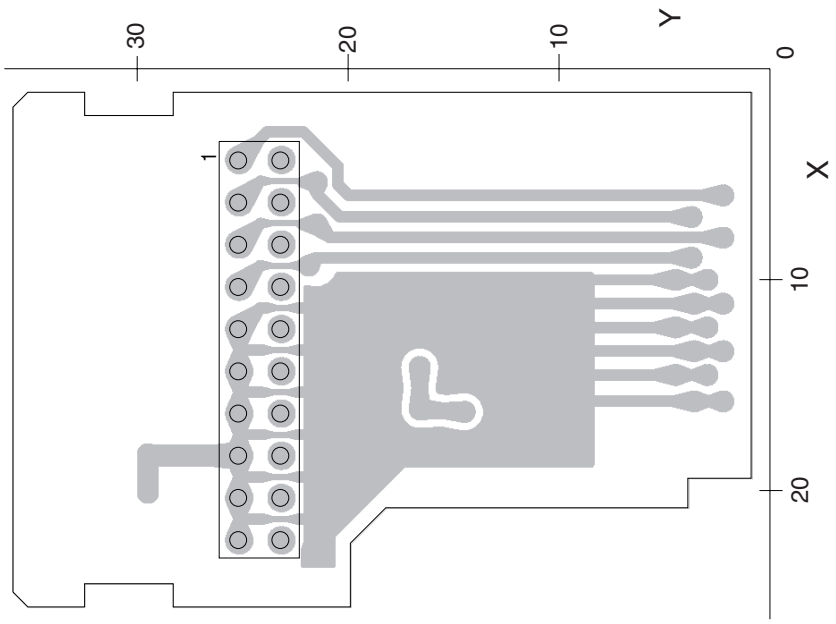

11.7 UPPER PCB

H UPPER PCB

SIDE A

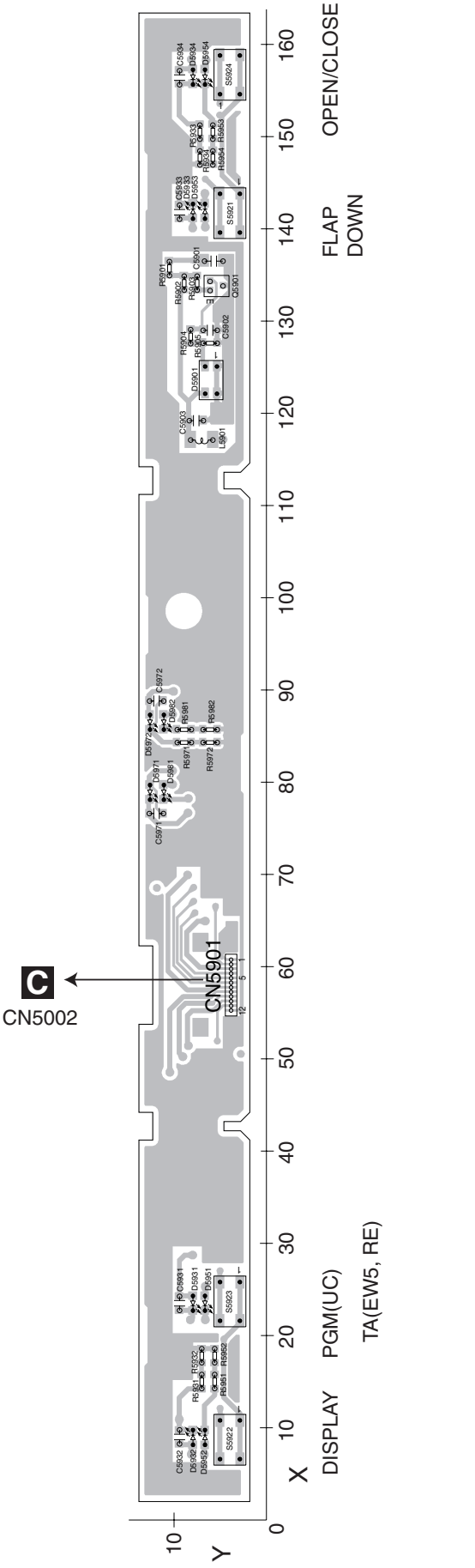

H UPPER PCB

SIDE B

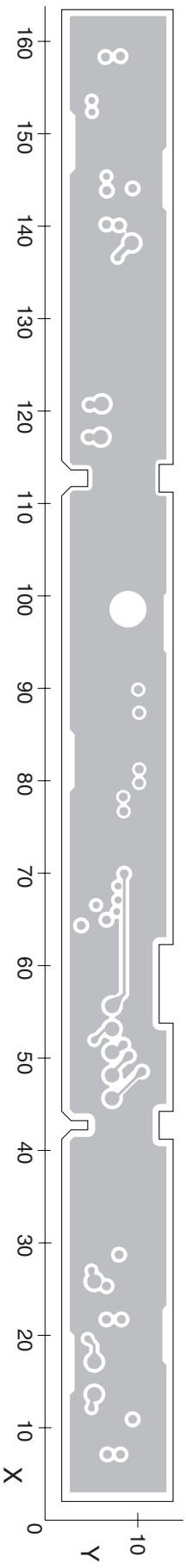

11.8 OPT PCB

OPT PCB

SIDE A

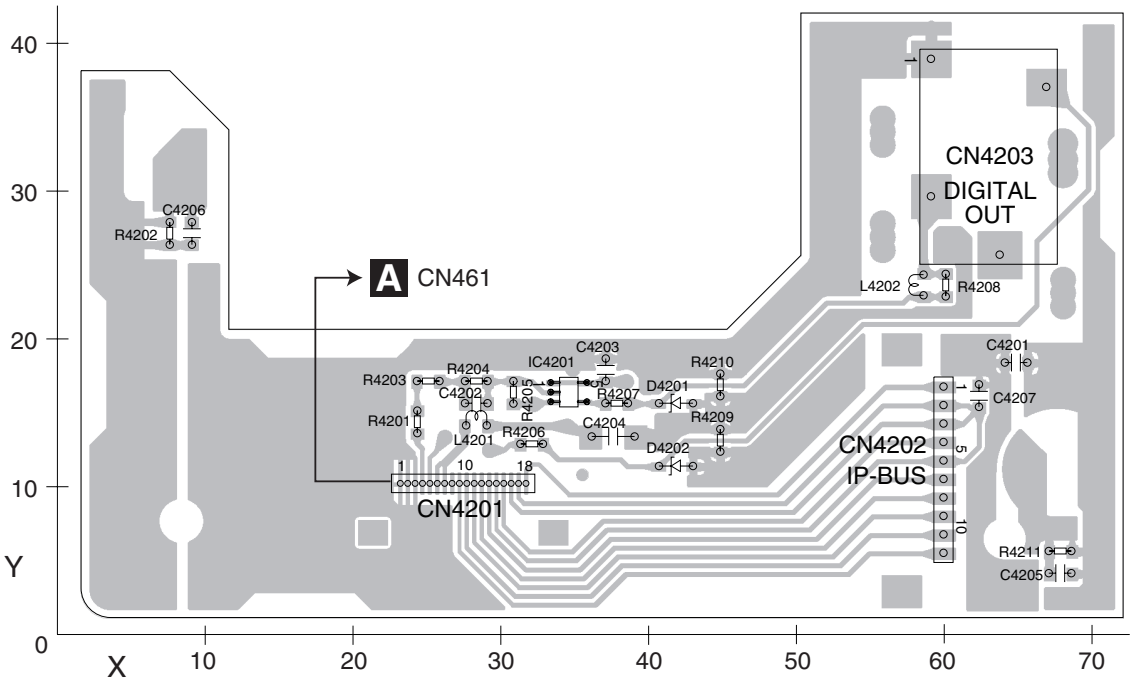

OPT PCB

SIDE B

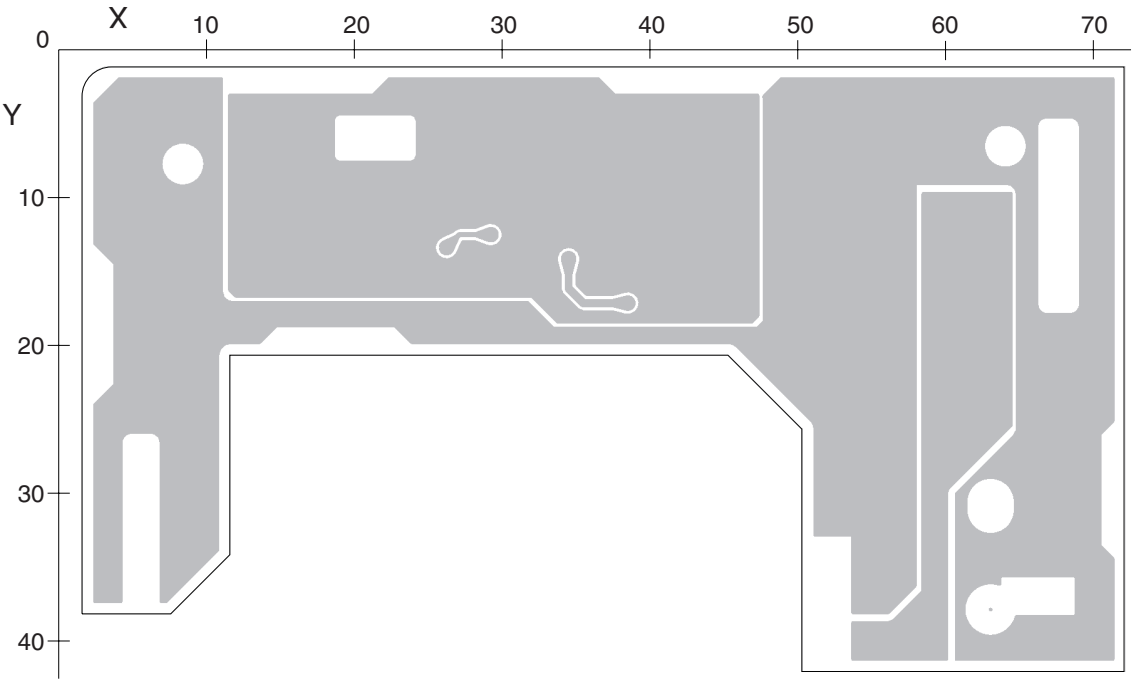

11.9 MAIN PCB UNITSERVICE), SWITCH PCB UNIT AND VOLUME PCB UNIT

J MAIN PCB UNIT(SERVICE)

SIDE A

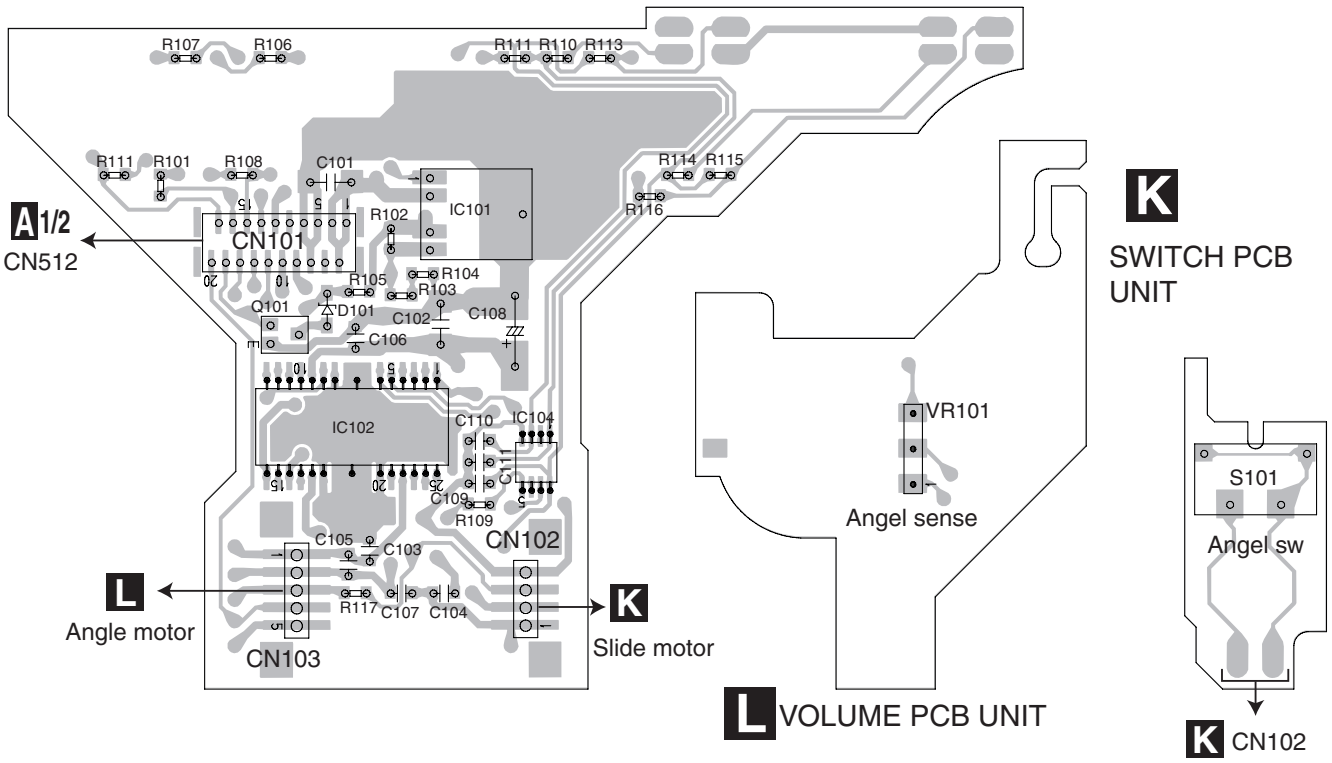

SIDE B

J MAIN PCB UNIT(SERVICE)

L VOLUME PCB UNIT

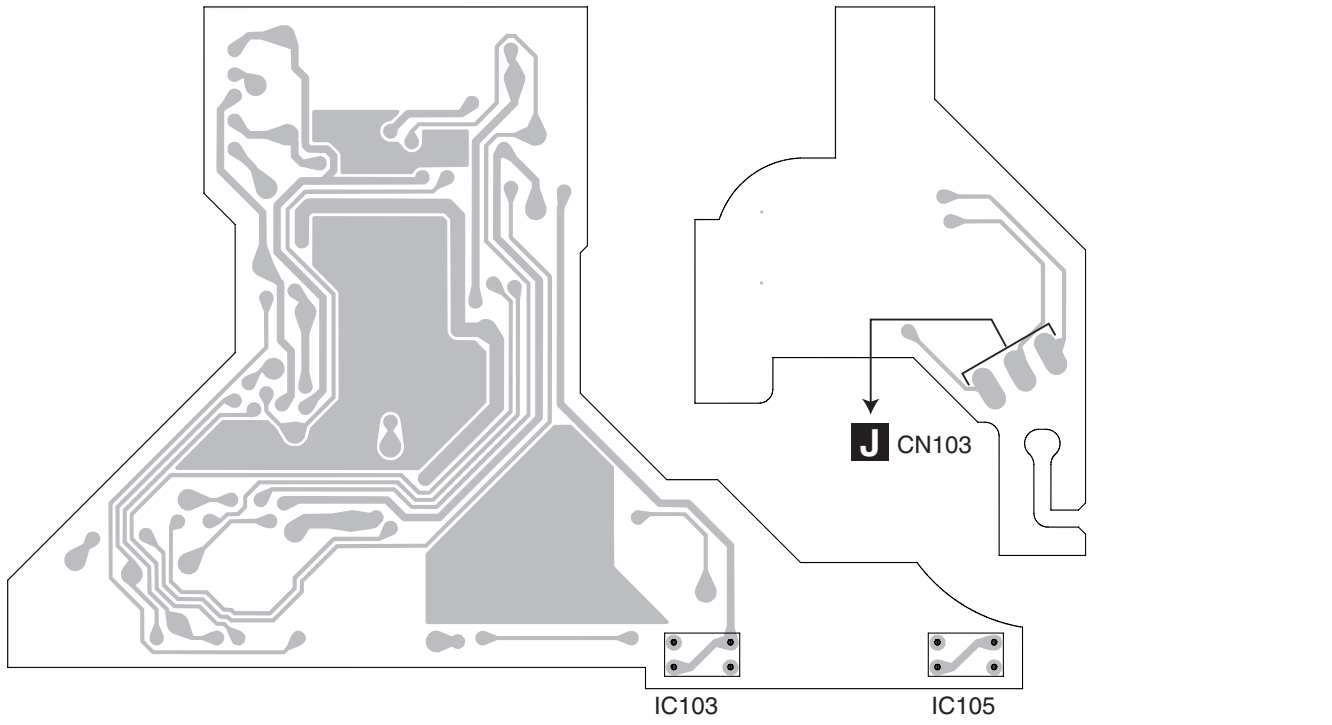

J K L

12. ELECTRICAL PARTS LIST

NOTE:

- *Parts whose parts numbers are omitted are subject to being not supplied.*
- *The part numbers shown below indicate chip components.*

  Chip Resistor

  RS1/◯S◯◯◯J,RS1/◯◯S◯◯◯J

  Chip Capacitor (except for CQS.....)

  CKS....., CCS....., CSZS.....
- *The ⚠ mark found on some component parts indicates the importance of the safety factor of the part. Therefore, when replacing, be sure to use parts of identical designation.*
- *Meaning of the figures and others in the parentheses in the parts list.*

Example) IC 301 is on the point (face A, 91 of x-axis, and 111 of y-axis) of the corresponding PC board.

IC 301 (A, 91, 111) IC NJM2068V

Circuit Symbol and No.	Part No.
Unit Number : (RC,RD,RI)	
Unit Name : Mother Unit	
Unit Number :	
Unit Name : Keyboard Unit	
Unit Number : CWN2330	
Unit Name : Monitor Unit	
Unit Number : YWX5005	
Unit Name : DVD Core Unit	
Unit Number : CWX3154	
Unit Name : Compound Unit(A)	
Unit Number : CWX3394	
Unit Name : Compound Unit(B)	
Unit Number :	
Unit Name : OPT/RCA Unit	
Unit Number : CXX2316	
Unit Name : Main PCB Unit(SERVICE)	
Unit Number : CZW5029	
Unit Name : Switch PCB Unit	
Unit Number : CZW5028	
Unit Name : Volume PCB Unit	

A

Unit Number : (RC,RD,RI)

Unit Name : Mother Unit

MISCELLANEOUS

Circuit Symbol and No.		Part No.
IC 101	(B,62,15) IC	NJM2794RB2
IC 111	(A,87,38) IC	NJM2136V
IC 131	(B,53,15) IC	NJM2794RB2
IC 141	(B,78,40) IC	NJM2136V
IC 151	(A,51,19) IC	NJM2794RB2
IC 161	(B,28,36) IC	NJM2136V
IC 181	(B,32,45) IC	NJM2136V
IC 191	(B,26,54) IC	NJM2136V
IC 192	(B,29,61) IC	SM5304AV
IC 221	(A,84,21) IC	NJM2233BM
IC 231	(B,87,40) IC	NJM2136V
IC 241	(B,61,40) IC	AN15883A
IC 251	(A,74,51) IC	NJM2136V
IC 252	(B,66,55) IC	BA7623F
IC 281	(B,51,78) IC	PML017A
IC 331	(A,36,132) IC	PAL007C
IC 351	(A,109,69) IC	TC7WH08FU
IC 401	(B,104,138) IC	NJM2794RB2
IC 461	(A,124,90) IC	HA12241FP
IC 601	(B,119,47) IC	PE5597A
IC 731	(A,94,24) IC	S-80827CNNB-B8M
IC 732	(A,98,31) L-MOS And Gate	TC7SET08FUS1
IC 801	(B,154,24) IC	BA00DD0WHFP
IC 811	(B,125,129) IC	NJM2391DL1-33
IC 812	(B,112,126) IC	BA00DD0WHFP
IC 821	(B,152,49) IC	BA00DD0WHFP
IC 831	(B,145,36) IC	S-812C56AUA-C3K
IC 832	(A,145,35) IC	LT3461AES6
IC 841	(B,136,88) IC	S-812C33AUA-C2N
IC 851	(B,142,54) IC	S-812C50AUA-C3E
IC 852	(B,140,69) Regulator	BA00CC0WFP
IC 861	(B,134,20) IC	BA00DD0WHFP
IC 971	(B,21,16) IC	AN8011S
Q 111	(A,89,32) Transistor	2SC4081
Q 141	(B,77,34) Transistor	2SC4081
Q 161	(B,22,38) Transistor	2SC4081
Q 181	(B,25,45) Transistor	2SC4081
Q 191	(B,20,55) Transistor	2SC4081
Q 231	(B,87,34) Transistor	2SC4081
Q 251	(A,67,42) Transistor	2SC4081
Q 271	(A,67,37) Transistor	2SC4081

Circuit Symbol and No.		Part No.
Q 272	(A,70,37) Chip Transistor	2SA1576A
Q 311	(A,32,85) Transistor	IMH23
Q 312	(A,32,74) Transistor	IMH23
Q 313	(A,32,80) Transistor	IMH23
Q 331	(B,54,101) Transistor	IMD3A
Q 351	(B,81,102) Chip Transistor	DTC124EUA
Q 352	(B,84,101) Chip Transistor	DTC124EUA
Q 353	(B,92,100) Chip Digital Transistor	DTA124EUA
Q 354	(B,92,106) Chip Digital Transistor	DTA124EUA
Q 355	(B,88,100) Digital Transistor	DTC144EUA
Q 356	(B,83,62) Transistor	IMD2A
Q 357	(B,83,118) Transistor	IMH23
Q 461	(A,135,94) Transistor	UMF23N
Q 501	(A,110,11) Chip Transistor	DTA114EUA
Q 502	(A,108,17) Digital Transistor	DTC144EUA
Q 503	(A,116,19) Transistor	2SC4081
Q 521	(A,124,20) Transistor	IMD3A
Q 522	(A,127,20) Transistor	IMD3A
Q 523	(A,131,20) Transistor	IMD3A
Q 541	(B,55,60) Transistor	UMD3N
Q 542	(B,51,54) Transistor	IMH23
Q 731	(A,101,24) Transistor	2SC4081
Q 741	(B,25,113) Transistor	IMD2A
Q 742	(B,51,112) Chip Transistor	DTC124EUA
Q 743	(B,47,114) Transistor	2SC4081
Q 744	(B,48,118) Digital Transistor	DTC144EUA
Q 761	(B,70,105) Chip Transistor	2SA1576A
Q 762	(B,54,109) Chip Transistor	DTC114EUA
Q 763	(B,64,104) Chip Transistor	2SA1576A
Q 765	(B,60,109) Transistor	UMX1N
Q 766	(B,77,103) Transistor	2SC4081
Q 781	(A,117,12) Transistor	2SA1577
Q 782	(A,120,7) Digital Transistor	DTC144EUA
Q 783	(A,125,12) Transistor	2SA1577
Q 784	(A,127,7) Digital Transistor	DTC144EUA
Q 801	(B,143,23) Transistor	2SD1767
Q 802	(A,144,46) Transistor	IMD3A
Q 803	(A,150,46) Transistor	IMD3A
Q 804	(A,155,46) Transistor	IMD3A
Q 831	(B,157,36) Transistor	2SD1767
Q 832	(A,157,35) Transistor	UMD3N
Q 841	(B,142,85) Transistor	2SB1184F5
Q 842	(B,156,76) Transistor	2SD1767
Q 851	(B,154,61) Transistor	2SB1184F5
Q 853	(A,139,74) Transistor	UMF23N
Q 871	(B,155,95) Transistor	2SA2060
Q 872	(A,159,92) Transistor	2SC4081
Q 873	(B,161,95) Chip Transistor	2SA1576A
Q 874	(A,155,94) Chip Transistor	DTC114EUA
Q 875	(A,160,98) Transistor	2SA2060
Q 891	(B,139,8) Chip Transistor	DTC114EUA
Q 892	(B,148,8) Transistor	2SB1189
Q 901	(B,15,85) Chip Transistor	DTC114EUA
Q 902	(B,11,102) Transistor	2SA1615-ZS1
Q 911	(A,139,86) Transistor	UMF23N
Q 921	(A,130,68) Transistor	UMF23N
Q 931	(A,130,63) Transistor	UMF23N
Q 941	(A,139,80) Transistor	UMF23N
Q 951	(B,15,121) Transistor	2SD1760F5
Q 952	(B,25,105) Digital Transistor	DTC114EUA

Circuit Symbol and No.		Part No.
Q 953	(B,25,107) Digital Transistor	DTC114EUA
Q 954	(B,20,115) Transistor	UMF5N
Q 961	(B,154,85) Transistor	2SD1760F5
Q 962	(A,149,83) Digital Transistor	DTC114EUA
Q 963	(A,157,87) Transistor	UMF5N
Q 972	(A,28,24) Transistor	2SJ529S
Q 973	(A,22,7) Transistor	2SJ529S
Q 974	(B,21,26) Transistor	2SC4097
Q 975	(B,19,7) Transistor	2SC4097
Q 976	(B,28,13) Chip Transistor	DTC124EUA
D 131	(B,76,115) Diode	MALS068X
D 132	(B,78,118) Diode	MALS068X
D 151	(B,49,31) Diode	MALS068X
D 152	(B,51,33) Diode	MALS068X
D 161	(B,40,34) Diode	MALS068X
D 181	(B,44,38) Diode	MALS068X
D 311	(A,36,85) Diode	DAP202K
D 312	(A,36,74) Diode	DAP202K
D 313	(A,36,80) Diode	DAP202K
D 331	(A,52,124) Diode	S1G-6904G2P
D 332	(B,66,153) Diode	S1G-6904G2P
D 351	(B,90,117) Diode	MALS068X
D 352	(B,86,115) Diode	MALS068X
D 353	(B,88,117) Diode	MALS068X
D 354	(B,88,120) Diode	MALS068X
D 355	(B,83,130) Diode	MALS068X
D 356	(B,79,115) Diode	MALS068X
D 357	(B,78,121) Diode	MALS068X
D 358	(B,82,122) Diode	MALS068X
D 359	(B,81,130) Diode	MALS068X
D 381	(B,78,119) Diode	MALS068X
D 481	(B,108,27) Diode	UMZ6R8EN
D 482	(A,95,11) Diode	UDZS5R6(B)
D 483	(B,80,27) Diode Network	DA204U
D 484	(B,111,20) Diode	UMZ6R8EN
D 485	(B,105,27) Diode Network	DA204U
D 501	(A,113,16) Diode	1SS355
D 541	(B,54,57) Diode	DAP202U
D 731	(A,94,29) Diode	1SS355
D 741	(A,61,115) Diode	RSX201L-30
D 742	(B,50,109) Diode	DAN202U
D 743	(B,47,109) Diode	DAN202U
D 744	(B,44,109) Diode	1SS355
D 745	(B,43,116) Diode	UDZS8R2(B)
D 761	(B,70,109) Diode	DAN202U
D 762	(B,64,108) Diode	DAN202U
D 764	(B,55,116) Diode	1SS355
D 765	(B,57,116) Diode	HZU7L(C3)
D 766	(B,60,115) Diode	HZU7L(A1)
D 767	(A,85,144) Diode	5KP24A
D 768	(B,77,108) Diode	UDZS6R8(B)
D 801	(B,142,28) Diode	UDZS5R6(B)
D 811	(B,115,134) Diode	1SR154-400
D 812	(B,109,137) Diode	1SR154-400
D 813	(B,109,134) Diode	1SR154-400
D 814	(B,102,120) Diode	1SR154-400
D 831	(A,156,31) Diode	HZU5R6(B2)
D 841	(B,149,75) Diode	1SR154-400
D 842	(B,155,72) Diode	UDZS18(B)
D 873	(A,155,97) Diode	UDZS16(B)

Circuit Symbol and No.		Part No.
D 874	(B,139,98) Diode	MALS068X
D 891	(A,153,10) Diode	RSX201L-30
D 951	(B,20,106) Diode	HZU9R1(B2)
D 952	(B,20,108) Diode	HZU6R8(B3)
D 953	(B,20,110) Diode	HZU8R2(B2)
D 961	(A,154,83) Diode	HZU7R5(B2)
D 962	(A,152,83) Diode	HZU6R8(B3)
D 972	(A,33,17) Diode	RSX201L-30
D 973	(A,33,14) Diode	RSX201L-30
D 974	(B,18,24) Diode	MA111
D 975	(B,16,8) Diode	MA111
D 976	(B,10,35) Diode	RSX201L-30
D 977	(B,13,35) Diode	RSX201L-30
ZNR401	(B,161,123) Surge Protector	IMSA-6801-01Y901
L 111	(A,84,33) Chip Ferrite Bead	CTF1399
L 141	(B,81,33) Chip Ferrite Bead	CTF1399
L 161	(B,19,43) Chip Ferrite Bead	CTF1399
L 181	(B,19,46) Chip Ferrite Bead	CTF1399
L 191	(B,15,54) Chip Ferrite Bead	CTF1399
L 192	(B,14,58) Chip Ferrite Bead	CTF1399
L 221	(A,77,25) Inductor	LCKBW100K2520
L 231	(B,93,34) Chip Ferrite Bead	CTF1399
L 241	(B,60,24) Chip Coil	LCTAW100J2520
L 242	(B,57,24) Chip Coil	LCTAW100J2520
L 251	(A,81,53) Chip Ferrite Bead	CTF1399
L 252	(A,72,70) Inductor	CTF1383
L 253	(B,72,54) Inductor	LCTAW150J2520
L 271	(A,63,38) Inductor	CTF1473
L 281	(A,61,74) Inductor	LCTAW2R2J2520
L 351	(A,111,64) Inductor	CTF1306
L 352	(B,84,125) Choke Coil 10 µH	CTH1259
L 401	(B,154,146) Inductor	LCTAW220J2520
L 402	(B,149,144) Chip Coil	LCTAW1R0J2520
L 403	(B,126,141) Inductor	CTF1379
L 404	(B,115,141) Inductor	LCTAW1R0J3225
L 461	(A,127,86) Inductor	LCTAW2R2J2520
L 462	(A,127,102) Inductor	CTF1473
L 481	(A,93,12) Chip Ferrite Bead	CTF1399
L 541	(A,43,52) Inductor	CTF1473
L 542	(A,44,50) Inductor	CTF1473
L 543	(A,43,47) Inductor	CTF1473
L 601	(A,117,49) Inductor	LCTAW2R2J2520
L 602	(A,109,37) Inductor	CTF1473
L 751	(A,133,50) Inductor	CTF1306
L 761	(B,71,113) Inductor	LCTAW2R2J2520
L 762	(B,67,112) Inductor	LCTAW2R2J2520
L 763	(B,74,111) Inductor	CTF1295
L 831	(A,149,35) Power Inductor(10U)	DTL1124
L 832	(A,152,30) Inductor	CTF1473
L 891	(A,140,18) Coil	CTH1267
L 901	(A,23,120) Inductor	CTH1262
L 971	(A,37,23) Coil	CTH1303
L 972	(A,32,8) Coil	CTH1303
L 973	(B,13,21) Chip Coil	LCTAW100J2520
L 974	(A,18,24) Inductor	CTH1254
X 601	(B,98,45) Oscillator 4.718592 MHz	CSS1703
VR271	(A,70,32) Semi-fixed 1 KΩ(OB)	CCP1390
VR971	(A,28,16) Semi-fixed 10 kΩ(B)	CCP1396
⚠FU311	(B,18,74) Fuse 3.15 A	CEK1259
⚠FU351	(B,85,144) Fuse 3.15 A	CEK1259

Circuit Symbol and No.		Part No.
⚠FU352	(B,79,144) Fuse 3.15 A	CEK1259
⚠FU521	(A,23,92) Fuse 2 A	CEK1257
⚠FU522	(A,19,91) Fuse 200 mA	CEK1247
⚠FU523	(A,16,91) Fuse 200 mA	CEK1247
⚠FU761	(B,68,146) Fuse 3.15 A	CEK1259
⚠FU891	(B,147,12) Fuse 1.25 A	CEK1255
⚠FU901	(B,8,92) Fuse 1.25 A	CEK1255
⚠FU951	(B,13,113) Fuse 630 mA	CEK1252
⚠FU961	(A,134,86) Fuse 630 mA	CEK1252
⚠FU971	(A,39,5) Fuse 2 A	CEK1257
⚠FU972	(A,43,24) Fuse 2 A	CEK1257
⚠FU973	(A,15,30) Fuse 2 A	CEK1257
BZ601	(A,84,10) Buzzer	CPV1063

RESISTORS

R 101	(B,59,11)	RS1/16S223J
R 102	(B,64,11)	RS1/16S223J
R 105	(B,50,41)	RS1/16S0R0J
R 106	(B,50,43)	RS1/16S0R0J
R 112	(A,88,46)	RS1/16S472J
R 113	(A,85,46)	RS1/16S472J
R 114	(A,90,40)	RS1/16S101J
R 115	(A,88,44)	RS1/16S472J
R 116	(A,85,44)	RS1/16S472J
R 117	(A,84,39)	RS1/16S102J
R 118	(A,89,29)	RS1/16S272J
R 119	(A,86,29)	RS1/16S472J
R 120	(B,70,27)	RS1/16S102J
R 121	(A,77,32)	RS1/16S122J
R 131	(B,51,11)	RS1/16S223J
R 132	(B,55,11)	RS1/16S223J
R 135	(B,50,44)	RS1/16S0R0J
R 136	(B,50,46)	RS1/16S0R0J
R 137	(B,49,11)	RS1/16S0R0J
R 138	(B,55,8)	RS1/16S0R0J
R 139	(B,53,8)	RS1/16S0R0J
R 141	(A,76,123)	RS1/16S750J
R 142	(B,76,48)	RS1/16S472J
R 143	(B,79,48)	RS1/16S472J
R 144	(B,75,38)	RS1/16S101J
R 145	(B,76,46)	RS1/16S472J
R 146	(B,79,46)	RS1/16S472J
R 147	(B,82,40)	RS1/16S102J
R 148	(B,79,34)	RS1/16S272J
R 149	(B,78,31)	RS1/16S472J
R 155	(B,54,29)	RS1/16S0R0J
R 156	(B,52,29)	RS1/16S0R0J
R 161	(B,40,36)	RS1/16S750J
R 162	(B,33,38)	RS1/16S472J
R 163	(B,33,35)	RS1/16S472J
R 164	(B,25,39)	RS1/16S101J
R 165	(B,28,39)	RS1/16S472J
R 166	(B,31,34)	RS1/16S472J
R 167	(B,29,33)	RS1/16S102J
R 168	(B,22,36)	RS1/16S272J
R 169	(B,21,33)	RS1/16S472J
R 170	(B,73,27)	RS1/16S0R0J
R 181	(B,42,41)	RS1/16S750J
R 182	(B,37,47)	RS1/16S472J
R 183	(B,37,45)	RS1/16S472J

Circuit Symbol and No.		Part No.	Circuit Symbol and No.		Part No.
R 184	(B,31,49)	RS1/16S472J	R 284	(B,35,115)	RS1/16S272J
R 185	(B,36,43)	RS1/16S472J	R 285	(B,31,112)	RS1/16S182J
R 186	(B,34,42)	RS1/16S102J	R 286	(B,37,112)	RS1/16S182J
R 187	(B,28,49)	RS1/16S101J	R 287	(B,29,112)	RS1/16S272J
R 188	(B,23,45)	RS1/16S272J	R 288	(B,38,115)	RS1/16S272J
R 189	(B,26,42)	RS1/16S472J	R 289	(B,61,78)	RAB4C102J
R 191	(B,36,53)	RS1/16S0R0J	R 290	(B,59,82)	RS1/16S473J
R 192	(B,32,55)	RS1/16S472J	R 291	(B,55,90)	RS1/16S563J
R 194	(B,32,54)	RS1/16S472J	R 292	(B,57,69)	RS1/16S563J
R 195	(B,25,57)	RS1/16S472J	R 293	(B,52,92)	RS1/16S0R0J
R 196	(B,25,51)	RS1/16S472J	R 294	(B,53,66)	RS1/16S0R0J
R 197	(B,23,58)	RS1/16S0R0J	R 311	(B,29,86)	RS1/16S390J
R 198	(B,23,51)	RS1/16S102J	R 312	(B,29,89)	RS1/16S390J
R 199	(B,18,55)	RS1/16S272J	R 313	(B,27,86)	RS1/16S223J
R 200	(B,20,51)	RS1/16S472J	R 314	(B,27,89)	RS1/16S223J
R 201	(B,19,58)	RS1/16S0R0J	R 317	(B,29,74)	RS1/16S390J
R 205	(B,22,61)	RS1/16S332J	R 318	(B,29,78)	RS1/16S390J
R 208	(A,52,41)	RS1/16S101J	R 319	(B,27,74)	RS1/16S223J
R 209	(A,52,38)	RS1/16S102J	R 320	(B,27,77)	RS1/16S223J
R 216	(B,48,54)	RS1/16S0R0J	R 323	(B,29,80)	RS1/16S390J
R 217	(B,51,51)	RS1/16S0R0J	R 324	(B,29,84)	RS1/16S390J
R 223	(B,79,18)	RS1/16S101J	R 325	(B,27,80)	RS1/16S223J
R 224	(B,68,27)	RS1/16S0R0J	R 326	(B,27,83)	RS1/16S223J
R 231	(B,85,54)	RS1/16S750J	R 331	(B,51,104)	RS1/16S103J
R 232	(B,86,48)	RS1/16S472J	R 332	(B,54,98)	RS1/16S473J
R 233	(B,88,48)	RS1/16S472J	R 351	(B,92,113)	RS1/16S471J
R 234	(B,84,40)	RS1/16S101J	R 352	(B,82,107)	RS1/16S514J
R 235	(B,86,46)	RS1/16S472J	R 353	(B,59,8)	RS1/16S0R0J
R 236	(B,88,46)	RS1/16S472J	R 354	(B,92,114)	RS1/16S471J
R 237	(B,90,40)	RS1/16S102J	R 355	(B,86,60)	RS1/16S102J
R 239	(B,89,34)	RS1/16S272J	R 356	(B,65,8)	RS1/16S0R0J
R 240	(B,90,34)	RS1/16S472J	R 357	(B,84,105)	RS1/16S102J
R 241	(B,66,50)	RS1/16S221J	R 358	(B,90,110)	RS1/16S472J
R 242	(B,64,50)	RS1/16S221J	R 360	(B,62,8)	RS1/16S0R0J
R 243	(B,74,27)	RS1/16S0R0J	R 361	(B,81,105)	RS1/16S393J
R 245	(B,71,27)	RS1/16S0R0J	R 362	(B,84,99)	RS1/16S104J
R 251	(A,66,48)	RS1/16S472J	R 363	(B,89,108)	RS1/16S472J
R 252	(A,66,45)	RS1/16S472J	R 364	(B,87,108)	RS1/16S104J
R 253	(A,69,48)	RS1/16S472J	R 365	(B,92,110)	RS1/16S102J
R 254	(A,67,45)	RS1/16S472J	R 366	(A,110,71)	RS1/16S102J
R 255	(A,72,48)	RS1/16S102J	R 367	(A,113,69)	RS1/16S102J
R 256	(A,83,42)	RS1/16S272J	R 368	(B,93,110)	RS1/16S102J
R 257	(A,72,45)	RS1/16S392J	R 369	(B,89,103)	RS1/16S102J
R 259	(A,81,50)	RS1/16S101J	R 370	(B,92,97)	RS1/16S102J
R 260	(A,68,51)	RS1/16S101J	R 371	(B,92,103)	RS1/16S102J
R 261	(B,62,56)	RS1/16S4702D	R 372	(B,92,116)	RS1/16S104J
R 262	(B,62,53)	RS1/16S3302D	R 391	(A,49,28)	RS1/16S183J
R 263	(A,72,68)	RS1/16S150J	R 392	(A,53,29)	RS1/16S183J
R 264	(A,72,65)	RS1/16S560J	R 393	(A,48,26)	RS1/16S223J
R 271	(A,63,33)	RS1/16S223J	R 394	(A,55,30)	RS1/16S223J
R 272	(A,64,33)	RS1/16S303J	R 395	(A,52,29)	RS1/16S183J
R 273	(A,67,34)	RS1/16S681J	R 396	(A,52,32)	RS1/16S183J
R 274	(A,70,40)	RS1/16S681J	R 397	(A,48,19)	RS1/16S223J
R 275	(A,67,31)	RS1/16S681J	R 398	(A,55,28)	RS1/16S223J
R 276	(A,70,35)	RS1/16S272J	R 403	(B,145,146)	RS1/16S681J
R 277	(A,73,39)	RS1/16S0R0J	R 404	(B,144,146)	RS1/16S681J
R 278	(A,59,93)	RS1/16S0R0J	R 405	(B,142,146)	RS1/16S681J
R 281	(B,33,112)	RS1/16S182J	R 406	(B,140,146)	RS1/16S681J
R 282	(B,35,112)	RS1/16S182J	R 407	(B,138,146)	RS1/16S681J
R 283	(B,31,115)	RS1/16S272J	R 409	(B,119,147)	RS1/16S681J

Circuit Symbol and No.		Part No.
R 416	(B,101,141)	RS1/16S0R0J
R 417	(B,101,145)	RS1/16S0R0J
R 421	(B,104,144)	RS1/16S682J
R 434	(B,101,143)	RS1/16S682J
R 461	(A,130,95)	RS1/16S101J
R 462	(A,128,94)	RS1/16S102J
R 463	(A,130,97)	RS1/16S150J
R 464	(A,130,98)	RS1/16S470J
R 465	(A,130,100)	RS1/16S101J
R 466	(A,133,99)	RS1/16S222J
R 467	(A,138,95)	RS1/16S332J
R 468	(A,137,97)	RS1/16S562J
R 469	(B,68,70)	RS1/16S181J
R 470	(B,65,70)	RS1/16S223J
R 471	(B,65,71)	RS1/16S102J
R 472	(B,76,75)	RS1/16S181J
R 473	(B,73,75)	RS1/16S223J
R 474	(B,68,74)	RS1/16S102J
R 475	(A,130,105)	RS1/16S0R0J
R 476	(A,116,95)	RS1/16S0R0J
R 481	(B,92,26)	RS1/16S472J
R 482	(B,98,24)	RS1/16S472J
R 483	(B,81,24)	RS1/16S102J
R 484	(B,83,26)	RS1/16S102J
R 485	(B,86,26)	RS1/16S102J
R 486	(B,87,26)	RS1/16S222J
R 487	(B,89,26)	RS1/16S102J
R 488	(B,98,22)	RS1/16S102J
R 489	(B,90,26)	RS1/16S102J
R 490	(A,88,17)	RS1/16S102J
R 491	(B,97,20)	RS1/16S102J
R 492	(B,95,20)	RS1/16S102J
R 501	(A,108,14)	RS1/16S103J
R 502	(A,111,19)	RS1/16S223J
R 503	(A,114,19)	RS1/16S473J
R 504	(A,110,14)	RS1/16S472J
R 513	(A,36,92)	RS1/16S0R0J
R 514	(A,36,91)	RS1/16S0R0J
R 515	(A,39,94)	RS1/16S102J
R 521	(A,121,18)	RS1/16S102J
R 522	(A,127,17)	RS1/16S102J
R 523	(A,131,17)	RS1/16S102J
R 531	(B,108,13)	RS1/16S0R0J
R 532	(B,108,7)	RS1/16S0R0J
R 533	(B,108,10)	RS1/16S0R0J
R 534	(A,106,29)	RS1/16S102J
R 535	(B,103,5)	RS1/16S0R0J
R 536	(B,108,12)	RS1/16S0R0J
R 537	(B,103,7)	RS1/16S0R0J
R 538	(B,108,9)	RS1/16S0R0J
R 545	(A,41,56)	RS1/16S471J
R 546	(A,49,57)	RS1/16S102J
R 547	(A,46,56)	RS1/16S471J
R 548	(A,49,56)	RS1/16S221J
R 549	(A,52,57)	RS1/16S221J
R 550	(A,49,54)	RS1/16S221J
R 553	(B,58,60)	RS1/16S102J
R 601	(A,113,39)	RS1/16S471J
R 602	(A,113,40)	RS1/16S102J
R 603	(A,109,39)	RS1/16S0R0J

Circuit Symbol and No.		Part No.
R 604	(A,112,45)	RS1/16S102J
R 605	(A,106,47)	RS1/16S0R0J
R 606	(A,106,45)	RS1/16S102J
R 607	(A,109,51)	RS1/16S471J
R 608	(A,114,52)	RS1/16S471J
R 609	(B,101,56)	RS1/16S182J
R 610	(B,102,56)	RS1/16S182J
R 611	(A,107,39)	RS1/16S473J
R 612	(A,109,45)	RS1/16S473J
R 613	(A,109,48)	RS1/16S104J
R 614	(A,106,44)	RS1/16S473J
R 615	(A,114,54)	RS1/16S102J
R 616	(A,105,50)	RS1/16S472J
R 617	(B,99,59)	RS1/16S221J
R 618	(B,101,61)	RS1/16S221J
R 619	(B,104,46)	RS1/16S222J
R 620	(A,112,26) (RC,RI)	RS1/16S473J
R 621	(A,112,22) (RD)	RS1/16S473J
R 622	(A,113,26) (RD,RI)	RS1/16S473J
R 623	(A,113,22) (RC)	RS1/16S473J
R 624	(B,111,31)	RS1/16S0R0J
R 625	(B,104,62)	RS1/16S102J
R 626	(A,111,31)	RS1/16S102J
R 627	(A,130,41)	RAB4C0R0J
R 628	(A,111,35)	RS1/16S473J
R 629	(A,105,61)	RS1/16S0R0J
R 630	(A,107,65)	RS1/16S473J
R 631	(A,113,29)	RS1/16S103J
R 632	(A,107,61)	RS1/16S0R0J
R 633	(B,112,26)	RS1/16S102J
R 634	(A,102,61)	RS1/16S0R0J
R 635	(A,102,65)	RS1/16S473J
R 636	(B,115,17)	RS1/16S102J
R 637	(A,104,61)	RS1/16S0R0J
R 638	(A,105,65)	RS1/16S473J
R 639	(B,116,17)	RS1/16S102J
R 641	(A,113,35)	RS1/16S473J
R 642	(A,114,35)	RS1/16S104J
R 643	(B,116,32)	RS1/16S102J
R 644	(B,110,67)	RS1/16S471J
R 645	(A,111,59)	RS1/16S473J
R 646	(B,118,25)	RS1/16S102J
R 647	(B,117,29)	RS1/16S102J
R 648	(B,111,67)	RS1/16S471J
R 649	(B,113,67)	RS1/16S471J
R 650	(A,117,35)	RS1/16S102J
R 651	(A,119,35)	RS1/16S102J
R 652	(A,121,35)	RS1/16S104J
R 653	(B,120,25)	RS1/16S102J
R 654	(B,119,29)	RS1/16S102J
R 655	(B,119,63)	RS1/16S102J
R 656	(B,120,29)	RS1/16S102J
R 657	(B,120,63)	RS1/16S102J
R 658	(B,121,32)	RS1/16S102J
R 659	(B,122,29)	RS1/16S102J
R 660	(A,119,61)	RS1/16S102J
R 661	(B,123,32)	RS1/16S102J
R 662	(A,119,62)	RS1/16S102J
R 663	(B,124,62)	RS1/16S221J
R 664	(B,124,65)	RS1/16S104J

Circuit Symbol and No.		Part No.
R 665	(B,124,63)	RS1/16S221J
R 666	(A,121,55)	RS1/16S473J
R 667	(B,125,26)	RS1/16S102J
R 668	(A,121,51)	RS1/16S473J
R 669	(B,125,29)	RS1/16S102J
R 670	(B,125,32)	RS1/16S102J
R 671	(B,126,31)	RS1/16S102J
R 672	(B,128,31)	RS1/16S102J
R 673	(B,129,31)	RS1/16S102J
R 674	(A,95,5)	RS1/16S102J
R 675	(A,130,35)	RS1/16S473J
R 676	(A,132,35)	RS1/16S473J
R 677	(B,136,50)	RS1/16S473J
R 678	(A,130,51)	RS1/16S473J
R 679	(A,130,57)	RS1/16S473J
R 680	(A,130,52)	RS1/16S333J
R 681	(A,125,57)	RS1/16S104J
R 682	(A,125,55)	RS1/16S103J
R 683	(A,130,38)	RS1/16S473J
R 684	(B,117,65)	RS1/16S102J
R 685	(A,140,44)	RS1/16S473J
R 686	(A,140,46)	RS1/16S473J
R 687	(A,125,49)	RS1/16S103J
R 688	(A,130,45)	RAB4C102J
R 690	(A,108,54)	RS1/16S681J
R 691	(B,102,61)	RS1/16S103J
R 692	(A,115,29)	RS1/16S105J
R 693	(A,125,52)	RS1/16S183J
R 694	(A,125,51)	RS1/16S102J
R 695	(A,125,54)	RS1/16S102J
R 696	(B,136,54)	RS1/16S102J
R 697	(A,130,55)	RS1/16S0R0J
R 698	(A,121,40)	RS1/16S0R0J
R 699	(A,134,40)	RS1/16S473J
R 700	(A,114,56)	RS1/16S0R0J
R 722	(B,115,29)	RS1/16S0R0J
R 723	(B,109,33)	RS1/16S1501D
R 724	(A,137,44)	RS1/16S473J
R 725	(A,113,42)	RS1/16S0R0J
R 731	(A,101,27)	RS1/16S104J
R 732	(A,98,25)	RS1/16S473J
R 733	(A,99,27)	RS1/16S102J
R 734	(A,97,27)	RS1/16S102J
R 735	(A,93,27)	RS1/16S104J
R 736	(A,103,31)	RS1/16S102J
R 741	(B,25,115)	RS1/16S222J
R 742	(B,52,109)	RS1/16S103J
R 743	(B,44,112)	RS1/16S101J
R 744	(B,51,115)	RS1/16S103J
R 745	(B,47,112)	RS1/16S103J
R 746	(B,52,117)	RS1/16S221J
R 747	(B,44,114)	RS1/16S104J
R 749	(B,52,119)	RS1/16S101J
R 750	(B,39,114)	RS1/16S473J
R 751	(B,136,51)	RS1/16S473J
R 752	(A,137,48)	RS1/16S102J
R 753	(A,140,48)	RS1/16S102J
R 754	(A,141,50)	RS1/16S102J
R 755	(A,139,57)	RS1/16S103J
R 756	(A,141,57)	RS1/16S473J

Circuit Symbol and No.		Part No.
R 761	(A,130,49)	RS1/16S102J
R 762	(B,69,102)	RS1/16S102J
R 763	(B,73,107)	RS1/16S473J
R 764	(B,70,107)	RS1/16S472J
R 765	(B,54,113)	RS1/16S103J
R 766	(B,67,103)	RS1/16S473J
R 767	(B,66,102)	RS1/16S473J
R 769	(B,56,110)	RS1/16S104J
R 770	(B,71,116)	RS1/16S153J
R 771	(B,67,106)	RS1/16S103J
R 772	(B,58,113)	RS1/16S473J
R 773	(B,61,112)	RS1/16S103J
R 774	(B,64,112)	RS1/16S473J
R 775	(B,63,113)	RS1/16S472J
R 776	(B,73,103)	RS1/16S473J
R 777	(B,76,105)	RS1/16S103J
R 778	(B,78,106)	RS1/16S103J
R 779	(B,74,109)	RS1/16S103J
R 781	(A,119,10)	RS1/16S472J
R 782	(A,120,12)	RS1/16S223J
R 783	(A,127,10)	RS1/16S472J
R 784	(A,128,12)	RS1/16S223J
R 801	(B,142,26)	RS1/16S102J
R 802	(B,148,19)	RS1/16S5602D
R 803	(B,148,22)	RS1/16S1002D
R 804	(B,161,18)	RS1/16S102J
R 805	(A,144,48)	RS1/16S102J
R 806	(A,150,48)	RS1/16S102J
R 807	(A,155,48)	RS1/16S102J
R 808	(B,148,16)	RS1/16S5101D
R 811	(B,103,128)	RS1/16S5602D
R 812	(B,102,130)	RS1/16S1002D
R 813	(B,106,120)	RS1/16S102J
R 814	(B,103,131)	RS1/16S5600D
R 821	(B,161,44)	RS1/16S2702D
R 822	(B,158,44)	RS1/16S1002D
R 823	(B,162,55)	RS1/16S102J
R 824	(B,162,46)	RS1/16S2702D
R 832	(B,150,36)	RS1/16S5601D
R 833	(B,149,37)	RS1/16S6801D
R 834	(A,139,32)	RS1/16S473J
R 835	(A,139,37)	RS1/16S104J
R 836	(A,141,38)	RS1/16S164J
R 837	(A,144,38)	RS1/16S123J
R 838	(A,144,41)	RS1/16S123J
R 839	(A,145,38)	RS1/16S222J
R 840	(A,157,38)	RS1/16S392J
R 841	(B,142,92)	RS1/16S391J
R 842	(B,146,73)	RS1/16S2R2J
R 843	(B,146,71)	RS1/16S2R2J
R 844	(B,147,73)	RS1/16S2R2J
R 845	(B,147,71)	RS1/16S2R2J
R 846	(B,157,71)	RS1/16S271J
R 851	(B,154,68)	RS1/16S221J
R 852	(A,141,60)	RS1/16S2201D
R 853	(A,138,60)	RS1/16S1502D
R 854	(A,138,59)	RS1/16S1002D
R 855	(A,141,59)	RS1/16S0R0J
R 856	(B,132,67)	RS1/16S102J
R 857	(A,142,72)	RS1/16S104J

Circuit Symbol and No.		Part No.
R 858	(A,142,75)	RS1/16S183J
R 861	(B,136,28)	RS1/16S6202D
R 862	(B,140,23)	RS1/16S1002D
R 863	(B,128,26)	RS1/16S102J
R 871	(B,141,100)	RS1/16S683J
R 872	(B,141,98)	RS1/16S123J
R 873	(B,149,95)	RAB4C680J
R 874	(B,145,97)	RAB4C680J
R 875	(B,162,98)	RS1/16S102J
R 876	(A,168,106)	RS2PMFR47J
R 877	(A,155,92)	RS1/16S103J
R 878	(B,161,92)	RS1/16S103J
R 880	(A,157,90)	RS1/16S562J
R 881	(A,159,94)	RS1/16S102J
R 882	(A,167,94)	RAB4C680J
R 883	(A,163,93)	RAB4C680J
R 884	(B,159,97)	RS1/16S103J
R 885	(A,165,98)	RS1/16S103J
R 891	(B,143,8)	RS1/16S222J
R 892	(B,142,8)	RS1/16S222J
R 893	(B,145,8)	RS1/16S473J
R 901	(B,14,88)	RS1/16S301J
R 903	(B,15,91)	RS1/16S301J
R 905	(B,12,95)	RS1/16S153J
R 911	(A,142,85)	RS1/16S104J
R 912	(A,142,87)	RS1/16S103J
R 921	(A,133,66)	RS1/16S103J
R 922	(A,133,69)	RS1/16S103J
R 931	(A,133,60)	RS1/16S104J
R 932	(A,133,63)	RS1/16S223J
R 941	(A,142,80)	RS1/16S104J
R 942	(A,141,82)	RS1/16S223J
R 951	(B,21,121)	RS1/16S271J
R 952	(B,23,120)	RS1/16S271J
R 953	(B,25,109)	RS1/16S0R0J
R 954	(B,21,119)	RS1/16S271J
R 955	(B,21,118)	RS1/16S103J
R 956	(B,23,117)	RS1/16S103J
R 961	(A,130,83)	RS1/16S0R0J
R 963	(A,164,82)	RS1/16S0R0J
R 964	(A,161,83)	RS1/16S271J
R 965	(A,161,84)	RS1/16S271J
R 966	(A,161,86)	RS1/16S271J
R 967	(A,161,87)	RS1/16S103J
R 968	(A,161,89)	RS1/16S103J
R 972	(B,25,21)	RS1/16S3901D
R 973	(A,21,17)	RS1/16S4701D
R 975	(B,26,24)	RS1/16S2202D
R 976	(B,26,21)	RS1/16S2202D
R 978	(B,24,10)	RS1/16S6801D
R 979	(B,24,7)	RS1/16S0R0J
R 980	(B,23,10)	RS1/16S4701D
R 981	(A,23,13)	RS1/16S8200D
R 983	(B,23,27)	RS1/16S560J
R 984	(A,17,11)	RS1/16S560J
R 985	(B,20,24)	RS1/16S272J
R 986	(B,18,21)	RS1/16S221J
R 987	(B,19,10)	RS1/16S272J
R 988	(A,24,16)	RS1/16S6801D
R 989	(B,18,10)	RS1/16S221J
R 990	(A,24,17)	RS1/16S1502D
R 991	(B,27,9)	RS1/16S6801D
R 992	(B,21,10)	RS1/16S7501D
R 994	(B,27,11)	RS1/16S6802D
R 995	(A,21,13)	RS1/16S4702D
R 996	(B,21,21)	RS1/16S2203D
R 997	(A,19,17)	RS1/16S3302D
R 998	(A,19,13)	RS1/16S3302D

CAPACITORS

C 101	(B,59,13)		CKSRYB105K10
C 102	(B,62,11)		CKSRYB105K10
C 103	(B,61,11)		CKSRYB105K10
C 104	(B,64,13)		CKSRYB105K10
C 105	(B,52,23)		CKSRYB105K10
C 106	(B,51,23)		CKSRYB105K10
C 107	(A,75,12)		CKSQYB225K10
C 108	(B,62,19)		CKSRYB104K50
C 109	(A,74,7)		CEVLW220M16
C 111	(A,89,49)		CKSYB106K6R3
C 112	(A,85,49)		CKSYB106K6R3
C 113	(A,85,43)		CCSRCK2R0C50
C 114	(A,88,43)		CCSRCK2R0C50
C 115	(A,83,39)		CKSRYB104K50
C 116	(A,88,27)	10 µF	CCG1171
C 117	(A,84,36)		CKSRYB104K50
C 118	(B,70,33)		CKSRYB104K50
C 119	(A,92,37)	22 µF	CCG1178
C 131	(B,51,13)		CKSRYB105K10
C 132	(B,54,11)		CKSRYB105K10
C 133	(B,52,11)		CKSRYB105K10
C 134	(B,56,13)		CKSRYB105K10
C 135	(B,51,20)		CKSRYB105K10
C 136	(B,49,20)		CKSRYB105K10
C 137	(A,55,16)		CKSQYB225K10
C 138	(B,53,19)		CKSRYB104K50
C 139	(A,63,7)		CEVLW220M16
C 142	(B,76,51)		CKSYB106K6R3
C 143	(B,79,51)		CKSYB106K6R3
C 144	(B,79,45)		CCSRCH4R0D50
C 145	(B,76,45)		CCSRCH4R0D50
C 146	(B,81,40)		CKSRYB104K50
C 147	(B,78,29)	10 µF	CCG1171
C 148	(B,82,37)		CKSRYB104K50
C 151	(A,48,23)		CKSRYB105K10
C 152	(A,52,23)		CKSRYB105K10
C 153	(A,49,23)		CKSRYB105K10
C 154	(A,51,23)		CKSRYB105K10
C 155	(B,59,20)		CKSRYB105K10
C 156	(B,57,20)		CKSRYB105K10
C 157	(A,51,12)		CKSQYB225K10
C 158	(A,50,15)		CKSRYB104K50
C 159	(A,56,7)		CEVLW220M16
C 162	(B,36,38)		CKSYB106K6R3
C 163	(B,36,35)		CKSYB106K6R3
C 164	(B,31,32)		CCSRCH4R0D50
C 165	(B,31,39)		CCSRCH4R0D50
C 166	(B,27,33)		CKSRYB104K50
C 167	(B,20,34)	10 µF	CCG1171

Circuit Symbol and No.			Part No.	Circuit Symbol and No.			Part No.
C 168	(B,24,34)		CKSRYB104K50	C 264	(A,80,59)		CEVLW221M4
C 169	(B,73,33)		CKSRYB104K50	C 265	(A,73,59)		CEVLW221M4
C 182	(B,42,46)		CKSYB106K6R3	C 266	(A,69,45)		CCSRCJ3R0C50
C 183	(B,40,43)		CKSYB106K6R3	C 271	(A,63,36)		CKSRYB105K10
C 184	(B,36,41)		CCSRCH4R0D50	C 272	(A,57,36)		CEVLW101M10
C 185	(B,34,49)		CCSRCH4R0D50	C 281	(A,53,67)		CKSQYB225K10
C 186	(B,32,42)		CKSRYB104K50	C 282	(A,55,67)		CKSQYB225K10
C 187	(B,23,42)	10 µF	CCG1171	C 283	(B,54,88)		CKSQYB225K10
C 188	(B,21,45)		CKSRYB104K50	C 284	(B,55,68)		CKSQYB225K10
C 189	(B,71,33)		CKSRYB104K50	C 285	(B,52,87)		CKSRYB104K50
C 191	(B,36,58)	22 µF	CCG1178	C 286	(B,52,69)		CKSRYB104K50
C 192	(B,36,56)	22 µF	CCG1178	C 287	(B,63,74)		CKSQYB225K10
C 193	(B,25,59)		CCSRCK2R0C50	C 288	(B,61,69)		CKSQYB225K10
C 194	(B,25,50)		CCSRCK2R0C50	C 289	(B,65,74)		CKSQYB225K10
C 195	(B,21,51)		CKSRYB104K50	C 290	(B,61,71)		CKSQYB225K10
C 196	(B,18,51)	10 µF	CCG1171	C 291	(B,49,89)		CKSYB475K16
C 197	(B,16,51)		CKSRYB104K50	C 292	(B,49,67)		CKSYB475K16
C 198	(B,17,59)		CKSYB106K6R3	C 293	(B,45,87)		CKSYB475K16
C 200	(B,28,65)		CKSYB475K16	C 294	(B,46,69)		CKSYB475K16
C 201	(B,30,58)		CKSRYB103K50	C 295	(B,41,83)		CKSYB475K16
C 202	(A,50,45)		CEVLW220M16	C 296	(B,42,71)		CKSYB475K16
C 203	(A,56,46)		CEVLW101M10	C 297	(A,58,79)		CEVLW470M16
C 205	(A,52,39)		CKSRYB105K10	C 298	(B,60,74)		CKSRYB104K50
C 221	(A,81,26)		CKSQYB225K10	C 299	(A,58,74)		CKSRYB474K16
C 222	(A,83,26)		CKSQYB225K10	C 300	(B,59,74)		CKSRYB104K50
C 223	(A,74,19)		CEVLW470M16	C 301	(A,54,73)		CEVLW100M16
C 224	(A,79,18)		CKSRYB103K50	C 302	(A,48,82)		CEVLW100M16
C 226	(B,68,33)		CKSRYB104K50	C 303	(B,43,81)		CKSRYB104K50
C 227	(B,51,38)		CKSRYB105K10	C 304	(A,46,73)		CEVLW470M16
C 228	(B,51,39)		CKSRYB105K10	C 311	(B,34,86)	10 µF	CCG1182
C 231	(B,84,51)		CKSYB106K6R3	C 312	(B,34,89)	10 µF	CCG1182
C 232	(B,87,51)		CKSYB106K6R3	C 315	(B,34,74)	10 µF	CCG1182
C 233	(B,86,45)		CCSRCH4R0D50	C 316	(B,34,77)	10 µF	CCG1182
C 234	(B,88,45)		CCSRCH4R0D50	C 319	(B,34,80)	10 µF	CCG1182
C 235	(B,92,40)		CKSRYB104K50	C 320	(B,34,83)	10 µF	CCG1182
C 236	(B,90,32)	10 µF	CCG1171	C 324	(B,14,72)		CKSRYB104K50
C 237	(B,92,37)		CKSRYB104K50	C 331	(B,28,119)		CKSRYB105K10
C 238	(B,74,33)		CKSRYB104K50	C 332	(B,35,119)		CKSRYB105K10
C 241	(A,66,18)		CEVLW470M16	C 333	(B,28,121)		CKSRYB105K10
C 242	(A,58,23)		CEVLW470M16	C 334	(B,35,121)		CKSRYB105K10
C 243	(B,63,29)		CKSRYB104K50	C 335	(B,31,119)		CKSRYB105K10
C 244	(B,56,29)		CKSRYB104K50	C 336	(B,38,119)		CKSRYB105K10
C 245	(A,66,29)		CKSYB475K16	C 337	(B,31,121)		CKSRYB105K10
C 246	(B,63,31)		CKSRYB104K50	C 338	(B,38,121)		CKSRYB105K10
C 247	(A,60,29)		CKSQYB225K10	C 339	(B,25,119)	10 µF	CCG1182
C 248	(B,59,29)		CKSRYB105K10	C 340	(B,42,121)		CKSYB475K16
C 249	(B,57,29)		CKSRYB105K10	C 341	(B,47,121)		CKSYB475K16
C 250	(B,60,29)		CKSRYB104K50	C 342	(A,55,125)		CKSRYB104K50
C 251	(A,62,49)	47 µF	CCG1181	C 343	(A,62,123)	1 000 µF/16 V	CCH1428
C 252	(A,62,46)	22 µF	CCG1178	C 345	(B,62,153)		CKSQYB104K50
C 253	(A,62,41)	47 µF	CCG1181	C 351	(B,86,108)		CKSRYB103K50
C 254	(A,62,44)	22 µF	CCG1178	C 360	(A,109,66)		CKSRYB103K50
C 256	(A,67,48)		CCSRCJ3R0C50	C 391	(B,53,33)		CKSRYB104K50
C 257	(A,72,46)		CKSRYB104K50	C 392	(B,50,35)		CKSRYB104K50
C 258	(A,77,38)		CEVLW100M16	C 401	(B,150,147)		CKSRYB103K50
C 259	(A,78,45)		CEVLW101M10	C 403	(A,148,109)		CEVLW101M10
C 260	(A,79,50)		CKSRYB104K50	C 405	(B,120,141)		CKSRYB103K50
C 261	(A,64,54)		CEVLW101M10	C 406	(B,120,143)		CKSYB475K16
C 262	(B,72,58)	10 µF	CCG1171	C 408	(B,116,145)		CKSRYB103K50
C 263	(A,87,59)		CEVLW221M4	C 409	(B,116,147)		CKSYB106K6R3

Circuit Symbol and No.		Part No.
C 410	(B,103,142)	CKSRYB474K16
C 411	(B,107,140)	CKSRYB474K16
C 413	(B,144,138)	CKSYB475K16
C 414	(A,157,9)	CKSRYB102K50
C 415	(B,109,141)	CKSRYB474K16
C 416	(B,106,141)	CKSRYB474K16
C 417	(B,99,132)	CKSRYB104K50
C 418	(B,101,136)	CKSQYB225K10
C 419	(B,99,129)	CKSRYB105K10
C 420	(B,129,143)	CKSRYB103K50
C 421	(B,145,141)	CKSYB475K16
C 422	(B,108,117)	CKSRYB103K50
C 423	(B,119,123)	CKSRYB104K50
C 461	(B,129,90)	CKSRYB102K50
C 462	(B,128,90)	CKSRYB102K50
C 464	(A,124,86)	CKSRYB104K50
C 465	(A,167,47)	CCSRCH101J50
C 466	(A,162,18)	CKSRYB102K50
C 467	(A,129,102)	CKSRYB104K50
C 468	(A,113,95)	CCSRCH101J50
C 481	(B,101,27)	CKSRYB104K50
C 484	(B,97,16)	CKSRYB104K50
C 501	(A,112,14)	CKSRYB103K50
C 511	(B,35,95)	CCSRCH101J50
C 513	(A,58,87)	CEVLW221M4
C 514	(A,48,88)	CEVLW221M4
C 515	(B,46,92)	CKSRYB102K50
C 541	(A,42,59)	CKSYB475K16
C 542	(A,42,65)	CKSRYB104K50
C 544	(A,46,65)	CKSRYB104K50
C 545	(A,45,63)	CKSRYB102K50
C 601	(A,118,52)	CKSYB106K6R3
C 602	(B,103,47)	CCSRCH8R0D50
C 603	(B,103,44)	CCSRCH8R0D50
C 604	(A,109,42)	CKSRYB104K50
C 605	(A,118,41)	CKSRYB102K50
C 606	(B,101,54)	CCSRCH470J50
C 607	(B,102,54)	CCSRCH470J50
C 608	(B,104,56)	CKSRYB103K50
C 609	(B,104,38)	CKSRYB105K10
C 610	(B,100,37)	CKSYB475K16
C 611	(A,116,35)	CKSRYB474K16
C 612	(A,130,54)	CKSRYB104K50
C 614	(A,118,44)	CEVLW100M16
C 615	(A,108,56)	CCSRCH470J50
C 616	(A,113,43)	CCSRCH101J50
C 617	(A,108,50)	CCSRCH470J50
C 618	(A,114,49)	CCSRCH470J50
C 619	(B,96,38)	CKSRYB104K50
C 731	(A,101,28)	CKSRYB104K50
C 732	(A,93,26)	CKSRYB105K10
C 733	(A,98,24)	CKSRYB102K50
C 741	(A,39,121)	CEVLW470M16
C 742	(A,47,121)	CEVLW470M16
C 743	(B,42,108) 10 µF	CCG1182
C 744	(A,54,117)	CEVLW330M10
C 751	(A,134,52)	CKSRYB105K10
C 761	(B,54,111)	CKSRYB105K10
C 762	(B,55,113)	CKSRYB104K50
C 763	(B,62,146)	CKSRYB104K50

Circuit Symbol and No.		Part No.
C 764	(B,67,109)	CKSRYB103K50
C 765	(B,65,110)	CKSRYB104K50
C 766	(B,61,115)	CKSRYB104K50
C 769	(B,76,106)	CKSRYB104K50
C 770	(B,88,147)	CKSRYB104K50
C 771	(A,73,129)	CKSRYB104K50
C 781	(A,114,11)	CKSRYB104K50
C 782	(A,122,11)	CKSRYB104K50
C 801	(B,145,29)	CKSRYB104K50
C 802	(A,143,24)	CEVLW470M6R3
C 803	(B,142,30)	CKSRYB103K50
C 804	(B,152,15)	CKSRYB103K50
C 805	(A,148,18)	CEVLW470M16
C 806	(A,156,20)	CKSQYB105K16
C 811	(A,129,110)	CEVLW220M16
C 812	(B,129,133)	CKSRYB103K50
C 813	(B,120,132)	CKSYB475K16
C 814	(B,119,124)	CKSRYB102K50
C 817	(B,102,127)	CKSRYB103K50
C 818	(A,108,109)	CEVLW470M16
C 819	(B,104,125)	CKSQYB105K16
C 821	(B,161,42)	CKSRYB103K50
C 822	(A,146,56)	CEVLW470M16
C 823	(B,161,50)	CKSQYB105K16
C 831	(A,142,33)	CKSQYB105K16
C 832	(B,152,36)	CKSRYB103K50
C 833	(B,151,38)	CKSRYB103K50
C 834	(A,140,33)	CKSRYB473K50
C 835	(A,141,36)	CCSRCH220J50
C 836	(A,157,31)	CKSRYB104K50
C 837	(A,147,31)	CKSYB475K16
C 838	(A,153,33)	CKSRYB104K50
C 839	(B,146,41)	CKSRYB104K50
C 840	(B,159,40)	CKSYB475K16
C 841	(B,136,82)	CKSRYB102K50
C 842	(A,148,75)	CEVLW101M10
C 843	(B,136,83)	CKSRYB103K50
C 844	(B,135,85)	CKSRYB103K50
C 845	(A,163,74)	CEVLW470M16
C 846	(A,166,66) 1 000 µF/16 V	CCH1428
C 847	(B,154,70)	CKSRYB104K50
C 851	(B,142,59)	CKSRYB102K50
C 852	(A,148,66)	CEVLW101M10
C 853	(B,140,57)	CKSRYB103K50
C 854	(B,141,50)	CKSRYB103K50
C 855	(B,158,65)	CKSRYB104K50
C 856	(A,156,69)	CEVLW470M16
C 857	(A,139,65)	CEVLW101M6R3
C 858	(A,139,70)	CKSRYB102K50
C 859	(B,142,61)	CKSQYB105K16
C 860	(A,139,72)	CKSRYB104K50
C 861	(B,136,30)	CKSRYB103K50
C 862	(A,132,10)	CEVLW470M16
C 863	(B,133,31)	CKSQYB105K16
C 871	(A,143,100) 10 µF	CCG1223
C 873	(A,150,96) 10 µF	CCG1223
C 891	(A,139,10)	CEVLW470M16
C 892	(A,147,10)	CEVLW470M16
C 901	(B,30,100)	CKSRYB104K50
C 902	(B,15,80)	CKSYB475K16

Circuit Symbol and No.		Part No.
C 904	(A,7,79) 2 200 µF/16V	CCH1659
C 911	(A,139,84)	CKSRYB104K50
C 921	(A,130,66)	CKSRYB104K50
C 931	(A,130,60)	CKSRYB104K50
C 932	(A,134,58)	CKSRYB104K50
C 941	(A,139,78)	CKSRYB104K50
C 942	(A,143,80)	CKSRYB104K50
C 951	(B,13,111)	CKSRYB103K50
C 952	(A,15,119)	CEVLW100M16
C 953	(B,20,112)	CKSRYB103K50
C 961	(A,154,88)	CKSRYB103K50
C 962	(A,151,89)	CEVLW100M16
C 963	(A,156,83)	CKSRYB103K50
C 971	(B,25,24)	CCSRCH101J50
C 974	(A,44,16) 220 µF/10 V	CCH1409
C 975	(B,25,7)	CKSRYB223K50
C 976	(A,39,15) 220 µF/10 V	CCH1409
C 977	(A,44,8) 470 µF/6.3 V	CCH1437
C 980	(B,28,18)	CKSYB475K16
C 981	(A,24,13)	CCSRCH101J50
C 982	(B,22,7)	CKSRYB683K16
C 984	(B,15,18)	CKSRYB104K50
C 985	(A,17,17)	CKSRYB104K50
C 986	(A,17,13)	CKSRYB104K50
C 987	(B,13,17)	CKSYB475K16
C 992	(A,7,28) 2 200 µF/16V	CCH1659
C 993	(B,16,24)	CKSYB475K16

B

Unit Number :
Unit Name : Keyboard Unit

MISCELLANEOUS

IC 4001	(B,79,9) IC	LC75836WS
IC 4021	(A,100,10) IC	SBX3050-01
Q 4041	(B,100,13) Digital Transistor	DTC143EUA
D 4001	(A,143,6) Diode	MALS068X
D 4002	(A,138,8) Diode	MALS068X
D 4003	(A,142,8) Diode	MALS068X
D 4021	(A,126,8) Diode	UDZS5R6(B)
D 4041	(B,107,6) Diode	DAN202U
D 4042	(A,94,9) White LED	NESW505C-5273
D 4051	(A,21,4) LED	CL-195SR-CD
D 4052	(A,6,5) LED	CL-195SR-CD
D 4053	(A,22,17) LED	CL-195SR-CD
D 4054	(A,6,18) LED	CL-195SR-CD
D 4055	(A,110,6) LED	CL-195SR-CD
D 4056	(A,123,6) LED	CL-195SR-CD
D 4057	(A,135,6) LED	CL-195SR-CD
D 4058	(A,146,20) LED	CL-195SR-CD
D 4059	(A,151,6) LED	CL-195SR-CD
D 4060	(A,164,7) LED	CL-195SR-CD
D 4071	(A,21,3) LED	CL-197HB1-D(CDE)
D 4072	(A,5,5) LED	CL-197HB1-D(CDE)
D 4073	(A,23,17) LED	CL-197HB1-D(CDE)
D 4074	(A,5,18) LED	CL-197HB1-D(CDE)
D 4075	(A,110,4) LED	CL-197HB1-D(CDE)
D 4076	(A,123,4) LED	CL-197HB1-D(CDE)
D 4077	(A,135,4) LED	CL-197HB1-D(CDE)
D 4078	(A,146,19) LED	CL-197HB1-D(CDE)
D 4079	(A,151,4) LED	CL-197HB1-D(CDE)
D 4080	(A,164,4) LED	CL-197HB1-D(CDE)
L 4001	(B,94,14) Inductor	CTF1473
S 4031	(A,156,19) Push Switch	CSG1155
S 4032	(A,14,11) Encoder	CSD1140
S 4033	(A,160,6) Push Switch	CSG1155
S 4034	(A,132,6) Push Switch	CSG1155
S 4035	(A,106,6) Push Switch	CSG1155
S 4036	(A,154,6) Push Switch	CSG1155
S 4037	(A,119,6) Push Switch	CSG1155
	LCD	CAW1946

RESISTORS

R 4001	(B,103,6)	RS1/16S221J
R 4002	(B,103,5)	RS1/16S221J
R 4003	(B,89,4)	RS1/16S221J
R 4004	(B,89,6)	RS1/16S473J
R 4005	(B,86,8)	RS1/16S393J
R 4021	(B,98,10)	RS1/16S101J
R 4022	(B,97,13)	RS1/16S470J
R 4031	(B,34,8)	RS1/16S513J
R 4033	(B,159,15)	RS1/16S103J
R 4034	(B,158,10)	RS1/16S222J
R 4035	(B,29,11)	RS1/16S103J
R 4036	(B,152,7)	RS1/16S222J
R 4037	(B,155,6)	RS1/16S103J
R 4041	(A,94,14)	RS1/16S391J
R 4042	(B,97,14)	RS1/16S391J
R 4051	(B,17,7)	RS1/16S271J
R 4052	(B,17,10)	RS1/16S271J
R 4053	(B,15,19)	RS1/16S271J
R 4054	(B,18,16)	RS1/16S271J
R 4055	(B,152,9)	RS1/16S101J
R 4056	(B,154,11)	RS1/16S221J
R 4057	(B,159,8)	RS1/16S101J
R 4058	(B,156,9)	RS1/16S221J
R 4071	(B,10,7)	RS1/16S151J
R 4072	(B,13,8)	RS1/16S391J
R 4073	(B,12,19)	RS1/16S151J
R 4074	(B,17,16)	RS1/16S391J
R 4075	(B,111,7)	RS1/16S151J
R 4076	(B,111,10)	RS1/16S391J
R 4077	(B,157,19)	RS1/16S151J
R 4078	(B,157,18)	RS1/16S391J
R 4079	(B,159,14)	RS1/16S151J
R 4080	(B,156,14)	RS1/16S391J
R 4091	(B,159,5)	RS1/16S0R0J
R 4092	(B,152,5)	RS1/16S0R0J

CAPACITORS

C 4001	(B,88,8)	CCSRCH102J25
C 4002	(B,91,7)	CKSRYB104K50
C 4003	(B,91,9)	CKSRYB104K50
C 4004	(B,88,10) 10 µF	CCG1171
C 4021	(B,100,9) 10 µF	CCG1171
C 4041	(B,94,9)	CKSRYB104K50

Circuit Symbol and No.		Part No.
C 4071	(B,20,5)	CKSRYB104K50
C 4072	(B,10,4)	CKSRYB104K50
C 4073	(B,26,14)	CKSRYB104K50
C 4074	(B,10,19)	CKSRYB104K50
C 4075	(A,112,8)	CKSRYB104K50
C 4076	(A,128,5)	CKSRYB104K50
C 4077	(A,138,5)	CKSRYB104K50
C 4078	(B,152,15)	CKSRYB104K50
C 4079	(A,148,5)	CKSRYB104K50
C 4080	(B,159,12)	CKSRYB104K50

Monitor Unit
Consists of
Monitor PCB
Upper PCB

C H

Unit Number : CWN2330
Unit Name : Monitor Unit

MISCELLANEOUS

IC 5101	(A,66,94)	Regulator IC	S-1132B15-U5
IC 5102	(A,66,99)	IC	S-1132B25-U5
IC 5103	(A,74,75)	IC	BD6171KV
IC 5201	(A,63,31)	IC	TA78L05F
IC 5202	(A,60,43)	L-MOS And Gate	TC7SET08FUS1
IC 5203	(A,59,37)	L-MOS And Gate	TC7SET08FUS1
IC 5204	(A,44,31)	IC	OZ961ISN
IC 5205	(A,40,21)	FET	SI6544BDQ
IC 5206	(A,40,17)	FET	SI6544BDQ
IC 5301	(A,81,110)	IC	NJM2505AF
IC 5401	(A,37,92)	IC	TC90A96BFGSING
IC 5501	(A,10,100)	IC	M62343FP
IC 5502	(A,12,79)	IC	TC7SET04FUS1
IC 5503	(A,14,87)	IC	NJM2100V
IC 5504	(A,56,83)	IC	TC7SET04FUS1
IC 5505	(A,15,74)	IC	TC7S66FU
IC 5506	(A,57,76)	IC	TC74VHC04FTS1
IC 5507	(A,11,66)	IC	NJM082BV
IC 5602	(A,121,47)	IC	S-80827CNNB-B8M
IC 5603	(A,119,65)	IC	PEG333A
IC 5604	(A,135,66)	IC	S-93C56BD0I-J8
IC 5801	(A,138,94)	IC	PEH098A
IC 5802	(A,116,91)	IC	PDC149A
Q 5101	(A,75,63)	Chip Transistor	DTC114EUA
Q 5102	(A,85,80)	FET	RSQ035P03
Q 5103	(A,84,73)	FET	RSQ035P03
Q 5201	(A,59,12)	Transistor	UMX2N
Q 5202	(A,60,25)	Transistor	2SC4617
Q 5203	(A,57,26)	Transistor	2SC4617
Q 5204	(A,55,41)	Transistor	2SA1774
Q 5205	(A,59,18)	Transistor	2SC4617
Q 5206	(A,62,18)	Transistor	2SC4617
Q 5301	(A,74,109)	Transistor	2SC4081
Q 5302	(A,62,111)	Transistor	2SA1576A
Q 5401	(A,39,112)	Transistor	2SC4617
Q 5501	(A,9,55)	Transistor	UMX2N
Q 5502	(A,13,55)	Transistor	UMT2N

Circuit Symbol and No.			Part No.
Q 5601	(A,113,48)	Chip Transistor	DTC124EUA
Q 5602	(A,144,46)	Transistor	2SA1774
Q 5603	(A,143,51)	Chip Transistor	DTC114EUA
Q 5604	(A,147,46)	Transistor	2SA1774
Q 5605	(A,146,51)	Chip Transistor	DTC114EUA
Q 5607	(A,137,39)	Chip Transistor	DTC114EUA
Q 5608	(A,140,45)	Transistor	2SA1797
Q 5701	(A,144,59)	Transistor	UMF5N
Q 5702	(A,144,63)	Transistor	UMF5N
Q 5703	(A,143,70)	Transistor	FMG12
Q 5801	(A,107,95)	Transistor	2SA1774
Q 5802	(A,103,91)	Transistor	2SA1774
Q 5803	(A,102,94)	Transistor	2SA1774
Q 5901	(A,134,5)	Transistor	2SA1774
D 5001	(A,109,105)	Diode	UDZS5R6(B)
D 5002	(A,111,107)	Diode	UDZS5R6(B)
D 5003	(A,110,110)	Diode	UDZS5R6(B)
D 5004	(A,112,110)	Diode	UDZS5R6(B)
D 5005	(A,122,33)	Diode	UDZS5R6(B)
D 5006	(A,114,39)	Diode	UDZS5R6(B)
D 5007	(A,119,39)	Diode	UDZS5R6(B)
D 5008	(A,122,37)	Diode	UDZS5R6(B)
D 5101	(A,73,95)	Diode	RB500V-40
D 5102	(A,73,100)	Diode	RB500V-40
D 5103	(A,87,85)	Diode	U2FWJ44N
D 5104	(A,87,69)	Diode	RB160M-30
D 5105	(A,83,64)	Diode	RB548W
D 5106	(A,81,64)	Diode	RB548W
D 5107	(A,72,63)	Diode	RB548W
D 5108	(A,70,63)	Diode	RB548W
D 5109	(A,68,63)	Diode	RB548W
D 5201	(A,57,22)	Diode	UDZS6R2(B)
D 5202	(A,55,46)	Diode	1SS355
D 5203	(A,62,40)		RB751V-40
D 5204	(A,47,20)	Diode	HZU6R2(B3)
D 5205	(A,47,15)	Diode	HZU6R2(B3)
D 5206	(A,57,20)	Diode	UDZS8R2(B)
D 5207	(A,63,6)	Diode	MA143
D 5208	(A,61,6)	Diode	HZU6R2(B3)
D 5209	(A,69,5)	Diode	MA143
D 5601	(A,124,47)	Diode	MA111
D 5701	(A,142,67)	Diode	MA111
D 5901	(A,124,6)	IC	TPS850
D 5931	(A,24,8)	LED	CL-197HB1-D(CDE)
D 5932	(A,9,8)	LED	CL-197HB1-D(CDE)
D 5933	(A,142,8)	LED	CL-197HB1-D(CDE)
D 5934	(A,156,8)	LED	CL-197HB1-D(CDE)
D 5951	(A,24,7)	LED	CL-195SR-CD
D 5952	(A,9,7)	LED	CL-195SR-CD
D 5953	(A,142,7)	LED	CL-195SR-CD
D 5954	(A,156,7)	LED	CL-195SR-CD
D 5971	(A,79,13)	LED	CL-197HB1-D(CDE)
D 5972	(A,87,13)	LED	CL-197HB1-D(CDE)
D 5981	(A,79,11)	LED	CL-195SR-CD
D 5982	(A,87,11)	LED	CL-195SR-CD
L 5101	(A,55,106)	Inductor	CTF1635
L 5102	(A,93,95)	Choke Coil 10 µH	CTH1249
L 5103	(A,84,90)	Choke Coil 18 µH	CTH1250
L 5104	(A,78,51)	Inductor	CTF1488
L 5105	(A,89,65)	Choke Coil 68 µH	CTH1318

Circuit Symbol and No.		Part No.
L 5107	(A,84,61) Inductor	DTL1096
L 5108	(A,16,112) Inductor	CTF1635
L 5109	(A,58,106) Inductor	CTF1635
L 5110	(A,60,89) Inductor	CTF1635
L 5111	(A,60,92) Inductor	CTF1635
L 5112	(A,57,101) Inductor	CTF1635
L 5113	(A,84,97) Choke Coil 18 µH	CTH1250
L 5114	(A,65,84) Inductor	CTF1635
L 5115	(A,93,64) Inductor	CTF1635
L 5116	(A,63,63) Inductor	CTF1635
L 5201	(A,78,24) Coil	CTH1338
L 5202	(A,57,40) Inductor	CTF1306
L 5301	(A,69,112) Inductor	LCKAW220J2520
L 5302	(A,65,112) Inductor	LCKAW270J2520
L 5303	(A,59,103) Inductor	LCKAW101J2520
L 5304	(A,79,107) Inductor	CTF1379
L 5401	(A,48,110) Inductor	CTF1306
L 5402	(A,42,113) Inductor	CTF1306
L 5403	(A,40,113) Inductor	CTF1306
L 5404	(A,34,112) Inductor	CTF1306
L 5405	(A,24,110) Inductor	CTF1306
L 5406	(A,33,112) Inductor	CTF1306
L 5407	(A,26,110) Inductor	CTF1306
L 5408	(A,36,112) Inductor	CTF1306
L 5409	(A,52,108) Inductor	CTF1306
L 5411	(A,50,110) Inductor	CTF1306
L 5412	(A,54,103) Inductor	CTF1306
L 5413	(A,20,104) Inductor	CTF1306
L 5414	(A,21,102) Inductor	CTF1306
L 5415	(A,21,101) Inductor	CTF1306
L 5416	(A,18,100) Inductor	CTF1306
L 5417	(A,17,99) Inductor	CTF1306
L 5418	(A,54,100) Inductor	CTF1306
L 5419	(A,20,98) Inductor	CTF1306
L 5420	(A,54,97) Inductor	CTF1306
L 5421	(A,16,97) Inductor	CTF1306
L 5422	(A,19,96) Inductor	CTF1306
L 5423	(A,15,95) Inductor	CTF1306
L 5424	(A,15,94) Inductor	CTF1306
L 5425	(A,54,94) Inductor	CTF1306
L 5426	(A,19,93) Inductor	CTF1306
L 5427	(A,19,91) Inductor	CTF1306
L 5428	(A,54,91) Inductor	CTF1306
L 5429	(A,19,90) Inductor	CTF1306
L 5430	(A,19,88) Inductor	CTF1306
L 5431	(A,54,88) Inductor	CTF1306
L 5432	(A,54,85) Inductor	CTF1306
L 5433	(A,19,87) Inductor	CTF1306
L 5434	(A,19,84) Inductor	CTF1306
L 5435	(A,19,83) Inductor	CTF1306
L 5436	(A,19,82) Inductor	CTF1306
L 5437	(A,54,83) Inductor	CTF1306
L 5438	(A,19,80) Inductor	CTF1306
L 5439	(A,47,73) Ferrite Bead	CTF1528
L 5440	(A,47,75) Ferrite Bead	CTF1528
L 5441	(A,46,73) Ferrite Bead	CTF1528
L 5442	(A,46,75) Ferrite Bead	CTF1528
L 5443	(A,45,74) Ferrite Bead	CTF1528
L 5444	(A,45,76) Ferrite Bead	CTF1528
L 5445	(A,43,74) Inductor	CTF1306

Circuit Symbol and No.		Part No.
L 5446	(A,39,77) Ferrite Bead	CTF1528
L 5447	(A,39,75) Ferrite Bead	CTF1528
L 5448	(A,38,77) Ferrite Bead	CTF1528
L 5449	(A,38,75) Ferrite Bead	CTF1528
L 5450	(A,37,77) Ferrite Bead	CTF1528
L 5451	(A,37,75) Ferrite Bead	CTF1528
L 5452	(A,36,74) Inductor	CTF1306
L 5453	(A,35,75) Ferrite Bead	CTF1528
L 5454	(A,35,77) Ferrite Bead	CTF1528
L 5455	(A,34,73) Ferrite Bead	CTF1528
L 5456	(A,33,77) Ferrite Bead	CTF1528
L 5457	(A,33,75) Ferrite Bead	CTF1528
L 5458	(A,33,73) Ferrite Bead	CTF1528
L 5459	(A,28,75) Ferrite Bead	CTF1528
L 5460	(A,29,77) Ferrite Bead	CTF1528
L 5461	(A,27,77) Ferrite Bead	CTF1528
L 5462	(A,25,75) Ferrite Bead	CTF1528
L 5463	(A,26,77) Ferrite Bead	CTF1528
L 5464	(A,25,76) Ferrite Bead	CTF1528
L 5465	(A,25,77) Ferrite Bead	CTF1528
L 5466	(A,48,75) Inductor	CTF1306
L 5467	(A,31,74) Inductor	CTF1306
L 5468	(A,30,74) Inductor	CTF1306
L 5469	(A,50,74) Inductor	CTF1306
L 5470	(A,42,74) Inductor	CTF1306
L 5471	(A,41,74) Inductor	CTF1306
L 5472	(A,18,78) Inductor	LCKAW101J2520
L 5501	(A,15,78) Inductor	CTF1306
L 5502	(A,8,84) Inductor	LCKAW101J2520
L 5503	(A,9,75) Inductor	LCKAW101J2520
L 5504	(A,53,62) Inductor	CTF1306
L 5505	(A,22,70) Inductor	DTL1096
L 5506	(A,15,65) Inductor	DTL1096
L 5508	(A,49,72) Inductor	CTF1306
L 5509	(A,28,70) Inductor	CTF1635
L 5510	(A,20,70) Inductor	CTF1635
L 5511	(A,62,81) Inductor	CTF1635
L 5602	(A,108,59) Inductor	CTF1306
L 5603	(A,136,60) Inductor	CTF1306
L 5604	(A,101,66) Inductor	CTF1306
L 5605	(A,132,48) Inductor	CTF1488
L 5701	(A,139,60) Inductor	CTF1379
L 5801	(A,104,77) Inductor	LCKAW2R2J2520
L 5802	(A,139,51) Inductor	CTF1488
L 5803	(A,108,77) Inductor	LCKAW2R2J2520
L 5804	(A,143,73) Inductor	CTF1395
L 5901	(A,117,7) Inductor	LCKBW100K2520
T 5201	(B,51,10) Transformer	CTT1119
TH5601	(A,106,56) Thermistor	CCX1051
X 5401	(A,45,112) Crystal Resonator 42 MHz	CSS1604
X 5601	(A,119,52) Ceramic Resonator 16.000 MHz	CSS1616
S 5921	(A,142,4) Push Switch	CSG1155
S 5922	(A,9,4) Push Switch	CSG1155
S 5923	(A,24,4) Push Switch	CSG1155
S 5924	(A,157,4) Push Switch	CSG1155
VR5201	(A,35,28) Semi-fixed 22 kΩ(B)	CCP1491
⚠FU5101	(A,83,51) Fuse 1.25 A	CEK1255
⚠FU5201	(A,72,23) Fuse 1.25 A	CEK1255

RESISTORS

Circuit Symbol and No.		Part No.
R 5005	(A,92,47)	RS1/16S0R0J
R 5006	(A,94,47)	RS1/16S0R0J
R 5007	(A,99,50)	RS1/16S0R0J
R 5008	(A,101,50)	RS1/16S0R0J
R 5009	(A,143,40)	RS1/16S0R0J
R 5010	(A,142,40)	RS1/16S0R0J
R 5011	(A,115,106)	RS1/16S101J
R 5012	(A,114,106)	RS1/16S101J
R 5013	(A,112,105)	RS1/16S101J
R 5014	(A,111,105)	RS1/16S101J
R 5015	(A,97,111)	RS1/16S101J
R 5101	(A,70,94)	RS1/16SS684J
R 5102	(A,70,99)	RS1/16SS474J
R 5103	(A,70,89)	RS1/16S0R0J
R 5104	(A,72,90)	RS1/16S6801D
R 5105	(A,89,94)	RS1/16S0R0J
R 5106	(A,80,88)	RS1/16S0R0J
R 5107	(A,75,90)	RS1/16S201J
R 5108	(A,81,86)	RS1/16S1001D
R 5109	(A,71,88)	RS1/16S1001D
R 5110	(A,75,88)	RS1/16S682J
R 5111	(A,66,81)	RS1/16S5100F
R 5112	(A,81,84)	RS1/16S1600D
R 5113	(A,78,87)	RS1/16S102J
R 5114	(A,69,81)	RS1/16S0R0J
R 5115	(A,78,85)	RS1/16S2700D
R 5116	(A,66,82)	RS1/16S2001F
R 5117	(A,73,85)	RS1/16S684J
R 5118	(A,77,82)	RS1/16S333J
R 5119	(A,73,82)	RS1/16S123J
R 5120	(A,82,80)	RS1/16S273J
R 5121	(A,82,83)	RS1/16S150J
R 5122	(A,87,72)	RS1/16S150J
R 5123	(A,82,75)	RS1/16S563J
R 5124	(A,74,67)	RS1/16S5102D
R 5125	(A,68,68)	RS1/16S0R0J
R 5126	(A,67,70)	RS1/16S1002D
R 5127	(A,76,65)	RS1/16S4300D
R 5128	(A,66,69)	RS1/16S1802D
R 5129	(A,77,67)	RS1/16S1802D
R 5130	(A,66,66)	RS1/16S2202D
R 5131	(A,66,63)	RS1/16S0R0J
R 5132	(A,78,64)	RS1/16S3303D
R 5133	(A,81,69)	RS1/16S0R0J
R 5134	(A,79,61)	RS1/16S0R0J
R 5135	(A,76,67)	RS1/16S2703D
R 5201	(A,63,43)	RS1/16S103J
R 5202	(A,57,24)	RS1/16S103J
R 5203	(A,60,24)	RS1/16S104J
R 5204	(A,60,45)	RS1/16S103J
R 5205	(A,56,29)	RS1/16S473J
R 5206	(A,56,44)	RS1/16S472J
R 5207	(A,58,28)	RS1/16S105J
R 5208	(A,54,44)	RS1/16S473J
R 5209	(A,56,38)	RS1/16S333J
R 5210	(A,49,37)	RS1/16S513J
R 5211	(A,62,37)	RS1/16S103J
R 5212	(A,53,27)	RS1/16S105J
R 5213	(A,59,40)	RS1/16S102J
R 5214	(A,35,30)	RS1/16S5102D

Circuit Symbol and No.		Part No.
R 5215	(A,45,20)	RS1/16S103J
R 5216	(A,45,16)	RS1/16S103J
R 5217	(A,57,17)	RS1/16S103J
R 5218	(A,63,15)	RS1/16S621J
R 5219	(A,57,18)	RS1/16S104J
R 5220	(A,61,21)	RS1/16S473J
R 5221	(A,61,12)	RS1/16S621J
R 5222	(A,60,15)	RS1/16S101J
R 5223	(A,58,15)	RS1/16S101J
R 5224	(A,59,9)	RS1/16S821J
R 5225	(A,58,6)	RS1/16S471J
R 5227	(A,38,31)	RS1/16S1001D
R 5301	(A,77,112)	RS1/16S512J
R 5302	(A,77,110)	RS1/16S104J
R 5303	(A,74,107)	RS1/16S153J
R 5304	(A,71,107)	RS1/16S104J
R 5305	(A,69,108)	RS1/16S681J
R 5306	(A,71,109)	RS1/16S471J
R 5307	(A,64,109)	RS1/16S272J
R 5308	(A,60,111)	RS1/16S391J
R 5311	(A,88,108)	RS1/16S101J
R 5312	(A,88,110)	RS1/16S101J
R 5401	(A,44,108)	RS1/16SS391J
R 5402	(A,59,113)	RS1/16S0R0J
R 5403	(A,45,108)	RS1/16SS105J
R 5404	(A,39,110)	RS1/16SS331J
R 5405	(A,37,111)	RS1/16SS152J
R 5406	(A,21,106)	RS1/16S0R0J
R 5407	(A,18,102)	RS1/16S331J
R 5408	(A,15,105)	RS1/16S101J
R 5410	(A,13,105)	RS1/16S101J
R 5411	(A,13,95)	RS1/16S470J
R 5412	(A,13,94)	RS1/16S470J
R 5413	(A,16,91)	RS1/16SS471J
R 5414	(A,16,93)	RS1/16SS333J
R 5415	(A,14,97)	RS1/16SS222J
R 5416	(A,14,93)	RS1/16SS152J
R 5417	(A,21,92)	RS1/16SS473J
R 5418	(A,44,70)	RAB4CQ221J
R 5419	(A,41,70)	RAB4CQ221J
R 5420	(A,35,70)	RAB4CQ221J
R 5421	(A,22,76)	RAB4CQ221J
R 5422	(A,47,71)	RS1/16SS221J
R 5423	(A,46,70)	RS1/16SS221J
R 5424	(A,38,73)	RS1/16SS221J
R 5425	(A,37,73)	RS1/16SS221J
R 5426	(A,33,71)	RS1/16SS221J
R 5427	(A,32,71)	RS1/16SS221J
R 5428	(A,30,72)	RS1/16SS221J
R 5429	(A,28,73)	RS1/16SS221J
R 5430	(A,27,75)	RS1/16SS221J
R 5501	(A,9,106)	RAB4CQ221J
R 5503	(A,12,81)	RS1/16S101J
R 5504	(A,17,75)	RS1/16SS681J
R 5506	(A,10,87)	RS1/16S101J
R 5507	(A,13,71)	RS1/16SS472J
R 5508	(A,8,65)	RS1/16S3302D
R 5509	(A,57,64)	RS1/16S6800D
R 5510	(A,11,60)	RS1/16S223J
R 5512	(A,52,64)	RS1/16S27R0D

Circuit Symbol and No.		Part No.	Circuit Symbol and No.		Part No.
R 5513	(A,54,64)	RS1/16S10R0D	R 5640	(A,110,75)	RS1/16S102J
R 5514	(A,56,63)	RS1/16S1000D	R 5641	(A,117,76)	RAB4CQ102J
R 5515	(A,59,66)	RS1/16S82R0F	R 5642	(A,108,68)	RS1/16S104J
R 5516	(A,58,70)	RS1/16S56R0D	R 5643	(A,112,75)	RS1/16S473J
R 5517	(A,57,70)	RS1/16S47R0D	R 5644	(A,108,71)	RS1/16S103J
R 5518	(A,56,70)	RS1/16S36R0D	R 5646	(A,103,65)	RS1/16S473J
R 5519	(A,54,70)	RS1/16S33R0F	R 5647	(A,140,42)	RS1/16S103J
R 5520	(A,53,70)	RS1/16S27R0D	R 5648	(A,140,40)	RS1/16S821J
R 5521	(A,51,70)	RS1/16S1800D	R 5649	(A,115,50)	RS1/16S473J
R 5522	(A,50,70)	RS1/16S82R0F	R 5650	(A,113,53)	RS1/16S473J
R 5523	(A,49,70)	RS1/16S12R0F	R 5651	(A,122,52)	RS1/16S473J
R 5524	(A,8,62)	RS1/16S5602D	R 5652	(A,130,57)	RS1/16S470J
R 5525	(A,9,60)	RS1/16S101J	R 5653	(A,133,55)	RS1/16S470J
R 5526	(A,8,52)	RS1/16SS153J	R 5654	(A,130,70)	RS1/16S473J
R 5527	(A,14,52)	RS1/16S153J	R 5655	(A,115,53)	RS1/16S470J
R 5528	(A,11,55)	RS1/16SS0R0J	R 5656	(A,131,68)	RS1/16S470J
R 5529	(A,12,52)	RS1/16S0R0J	R 5657	(A,132,62)	RS1/16S221J
R 5530	(A,32,66)	RS1/16SS102J	R 5658	(A,131,67)	RS1/16S221J
R 5531	(A,9,58)	RS1/16S100J	R 5659	(A,131,73)	RS1/16S473J
R 5532	(A,11,57)	RS1/16SS100J	R 5660	(A,135,71)	RS1/16S221J
R 5533	(A,9,52)	RS1/16S0R0J	R 5668	(A,133,53)	RS1/16S473J
R 5534	(A,11,52)	RS1/16S0R0J	R 5669	(A,136,57)	RS1/16S473J
R 5601	(A,144,48)	RS1/16S103J	R 5671	(A,130,73)	RS1/16S470J
R 5602	(A,144,44)	RS1/16S473J	R 5701	(A,148,64)	RS1/16S0R0J
R 5603	(A,112,50)	RS1/16S103J	R 5702	(A,147,59)	RS1/16S0R0J
R 5604	(A,120,45)	RS1/16S0R0J	R 5703	(A,142,60)	RS1/16S103J
R 5605	(A,147,48)	RS1/16S103J	R 5704	(A,142,64)	RS1/16S103J
R 5606	(A,147,44)	RS1/16S473J	R 5705	(A,140,60)	RS1/16S103J
R 5607	(A,125,46)	RS1/16S124J	R 5706	(A,140,64)	RS1/16S103J
R 5608	(A,117,47)	RS1/16S102J	R 5707	(A,145,61)	RS1/16S105J
R 5609	(A,109,49)	RS1/16S473J	R 5708	(A,145,65)	RS1/16S105J
R 5610	(A,107,51)	RS1/16S221J	R 5709	(A,146,71)	RS1/16S102J
R 5611	(A,108,48)	RS1/16S221J	R 5710	(A,146,69)	RS1/16S102J
R 5612	(A,110,47)	RS1/16S221J	R 5804	(A,119,101)	RAB4CQ101J
R 5613	(A,112,53)	RS1/16S471J	R 5805	(A,106,99)	RS1/16S102J
R 5614	(A,108,55)	RS1/16S471J	R 5806	(A,104,97)	RS1/16S102J
R 5615	(A,108,57)	RS1/16S471J	R 5807	(A,103,97)	RS1/16S102J
R 5616	(A,126,50)	RS1/16S471J	R 5808	(A,124,103)	RS1/16S473J
R 5617	(A,125,54)	RS1/16S471J	R 5811	(A,114,103)	RS1/16S471J
R 5618	(A,127,50)	RS1/16S471J	R 5812	(A,112,102)	RS1/16S473J
R 5619	(A,127,54)	RS1/16S471J	R 5813	(A,148,80)	RS1/16S101J
R 5620	(A,128,54)	RS1/16S471J	R 5814	(A,146,108)	RS1/16SS101J
R 5621	(A,130,54)	RS1/16S470J	R 5815	(A,146,80)	RS1/16S473J
R 5622	(A,107,60)	RS1/16S0R0J	R 5816	(A,142,80)	RS1/16S101J
R 5623	(A,131,52)	RS1/16S470J	R 5817	(A,141,106)	RS1/16SS101J
R 5624	(A,105,60)	RS1/16S105J	R 5818	(A,104,87)	RS1/16S1500D
R 5625	(A,105,58)	RS1/16S105J	R 5819	(A,104,85)	RS1/16S0R0J
R 5626	(A,132,58)	RS1/16S471J	R 5820	(A,127,96)	RAB4CQ101J
R 5627	(A,133,60)	RS1/16S471J	R 5821	(A,141,80)	RS1/16S101J
R 5628	(A,136,58)	RS1/16S473J	R 5822	(A,102,87)	RS1/16S1500D
R 5629	(A,131,62)	RS1/16S221J	R 5823	(A,102,85)	RS1/16S0R0J
R 5630	(A,103,57)	RS1/16S153J	R 5824	(A,127,93)	RAB4CQ101J
R 5632	(A,103,61)	RS1/16S473J	R 5825	(A,140,108)	RS1/16S473J
R 5633	(A,103,60)	RS1/16S473J	R 5826	(A,101,87)	RS1/16S1500D
R 5634	(A,132,71)	RS1/16S473J	R 5827	(A,101,85)	RS1/16S0R0J
R 5635	(A,102,64)	RS1/16S473J	R 5828	(A,139,108)	RS1/16S473J
R 5636	(A,139,71)	RS1/16S473J	R 5829	(A,136,78)	RS1/16SS101J
R 5637	(A,139,66)	RS1/16S103J	R 5831	(A,137,108)	RS1/16S473J
R 5638	(A,131,65)	RS1/16S103J	R 5832	(A,126,88)	RAB4CQ101J
R 5639	(A,103,75)	RS1/16S471J	R 5833	(A,105,90)	RS1/16S680J

Circuit Symbol and No.		Part No.
R 5834	(A,130,79)	RS1/16SS101J
R 5835	(A,136,107)	RS1/16SS101J
R 5836	(A,126,85)	RAB4CQ101J
R 5837	(A,130,80)	RS1/16SS0R0J
R 5838	(A,131,106)	RS1/16SS101J
R 5839	(A,107,85)	RS1/16S1501D
R 5840	(A,130,81)	RS1/16SS0R0J
R 5841	(A,130,82)	RS1/16SS101J
R 5842	(A,125,81)	RS1/16S101J
R 5843	(A,119,80)	RAB4CQ101J
R 5844	(A,115,81)	RAB4CQ101J
R 5845	(A,111,81)	RAB4CQ101J
R 5846	(A,123,81)	RS1/16S470J
R 5847	(A,121,81)	RS1/16S470J
R 5848	(A,124,81)	RS1/16S101J
R 5849	(A,109,101)	RS1/16S0R0J
R 5850	(A,122,103)	RS1/16S473J
R 5852	(A,122,104)	RS1/16S103J
R 5853	(A,145,115)	RS1/16S0R0J
R 5855	(A,11,116)	RS1/16S0R0J
R 5856	(A,122,100)	RS1/16S0R0J
R 5857	(A,143,80)	RS1/16S101J
R 5858	(A,145,80)	RS1/16S101J
R 5859	(A,133,107)	RS1/16SS101J
R 5860	(A,132,108)	RS1/16SS101J
R 5861	(A,131,108)	RS1/16SS101J
R 5862	(A,145,106)	RS1/16SS101J
R 5863	(A,145,108)	RS1/16SS101J
R 5864	(A,144,106)	RS1/16SS101J
R 5865	(A,131,79)	RS1/16SS101J
R 5866	(A,133,80)	RS1/16SS101J
R 5867	(A,133,78)	RS1/16SS101J
R 5868	(A,135,80)	RS1/16SS101J
R 5869	(A,134,78)	RS1/16SS101J
R 5870	(A,134,80)	RS1/16SS101J
R 5871	(A,144,108)	RS1/16SS101J
R 5872	(A,143,106)	RS1/16SS101J
R 5873	(A,142,108)	RS1/16SS101J
R 5874	(A,135,108)	RS1/16SS101J
R 5875	(A,135,107)	RS1/16SS101J
R 5876	(A,134,108)	RS1/16SS101J
R 5878	(A,127,100)	RS1/16S0R0J
R 5901	(A,136,11)	RS1/16S104J
R 5902	(A,134,9)	RS1/16S103J
R 5903	(A,134,8)	RS1/16S0R0J
R 5904	(A,128,8)	RS1/16S0R0J
R 5905	(A,128,6)	RS1/16S822J
R 5931	(A,15,7)	RS1/16S151J
R 5932	(A,18,7)	RS1/16S391J
R 5933	(A,151,7)	RS1/16S151J
R 5934	(A,148,7)	RS1/16S391J
R 5951	(A,15,6)	RS1/16S271J
R 5952	(A,18,6)	RS1/16S271J
R 5953	(A,151,6)	RS1/16S271J
R 5954	(A,148,6)	RS1/16S271J
R 5971	(A,84,9)	RS1/16S151J
R 5972	(A,84,6)	RS1/16S391J
R 5981	(A,86,9)	RS1/16S271J
R 5982	(A,86,6)	RS1/16S271J

Circuit Symbol and No.			Part No.
CAPACITORS			
C 5001	(A,121,31)		CKSRYB102K50
C 5002	(A,116,39)		CKSRYB102K50
C 5003	(A,120,39)		CKSRYB102K50
C 5004	(A,121,35)		CKSRYB102K50
C 5101	(A,56,110)		CKSRYB105K16
C 5102	(A,22,110)		CSZS100M10
C 5103	(A,57,110)		CKSRYB105K16
C 5104	(A,76,96)		CKSSYB104K10
C 5105	(A,60,87)		CSZS100M16
C 5106	(A,57,92)		CSZSR220M10
C 5107	(A,79,98)		CSZSR330M10
C 5108	(A,57,97)		CSZSR220M10
C 5109	(A,65,91)		CSZS100M10
C 5110	(A,63,89)		CKSSYB104K10
C 5111	(A,65,103)		CSZS100M10
C 5112	(A,65,104)		CKSSYB104K10
C 5113	(A,70,92)		CKSSYB104K10
C 5114	(A,71,95)		CKSRYB105K16
C 5115	(A,70,97)		CKSSYB104K10
C 5116	(A,71,100)		CKSRYB105K16
C 5117	(A,94,89)		CSZS100M16
C 5118	(A,95,88)		CKSRYB105K16
C 5119	(A,65,86)		CKSRYB104K50
C 5120	(A,20,110)		CSZS100M10
C 5121	(A,73,88)		CKSRYB473K50
C 5122	(A,89,89)	68 µF/6.3 V	CCH1440
C 5123	(A,78,88)		CCSRCH331J50
C 5124	(A,92,90)		CKSRYB104K50
C 5125	(A,70,84)		CKSRYB104K50
C 5126	(A,68,85)		CSZS100M16
C 5127	(A,75,85)		CKSRYB103K50
C 5128	(A,77,85)		CCSRCH101J50
C 5130	(A,78,82)		CKSRYB103K50
C 5131	(A,75,82)		CKSRYB393K50
C 5132	(A,71,84)		CKSRYB393K50
C 5133	(A,93,81)		CKSRYB103K50
C 5134	(A,80,80)		CKSRYB104K50
C 5135	(A,88,80)	10 µF	CCG1223
C 5136	(A,66,78)		CKSRYB393K50
C 5137	(A,91,80)	10 µF	CCG1223
C 5138	(A,78,53)		CKSRYB224K16
C 5139	(A,81,78)		CKSRYB105K16
C 5140	(A,81,77)		CKSRYB102K50
C 5141	(A,91,73)	10 µF	CCG1223
C 5143	(A,88,73)		CKSRYB103K50
C 5144	(A,66,74)		CKSRYB102K50
C 5145	(A,80,75)		CKSRYB104K50
C 5146	(A,65,71)		CKSRYB105K16
C 5147	(A,82,71)		CKSRYB105K16
C 5148	(A,80,71)		CKSRYB103K50
C 5149	(A,71,68)		CKSRYB104K50
C 5150	(A,76,60)		CKSYB475K16
C 5151	(A,81,67)		CKSRYB472K50
C 5152	(A,79,67)		CKSRYB472K50
C 5153	(A,96,66)		CKSRYB104K50
C 5154	(A,76,58)		CKSRYB103K50
C 5155	(A,72,66)		CKSRYB104K50
C 5156	(A,71,66)		CKSRYB104K50

Circuit Symbol and No.		Part No.
C 5157	(A,69,66)	CKSRYB104K50
C 5158	(A,95,68) 33 µF/10 V	CCH1586
C 5159	(A,94,62)	CKSRYB105K16
C 5160	(A,81,61)	CKSRYB104K50
C 5161	(A,83,61)	CKSQYF105Z25
C 5163	(A,70,60)	CKSQYF105Z25
C 5164	(A,68,60)	CKSQYF105Z25
C 5165	(A,66,60)	CKSQYF225Z16
C 5166	(A,64,60)	CKSQYF225Z16
C 5167	(A,84,68)	CKSRYB105K16
C 5168	(A,68,66)	CKSRYB105K16
C 5169	(A,83,58)	CKSQYF105Z25
C 5170	(A,62,60)	CKSQYF105Z25
C 5201	(A,80,30) 10 µF	CCG1223
C 5202	(A,80,34) 10 µF	CCG1223
C 5204	(A,64,27)	CKSRYB104K50
C 5205	(A,60,30)	CKSRYB105K16
C 5206	(A,57,43)	CKSRYB104K50
C 5207	(A,50,29)	CKSRYB104K50
C 5208	(A,50,33)	CKSRYB104K50
C 5209	(A,50,27)	CKSRYB105K16
C 5211	(A,50,30)	CKSRYB474K16
C 5212	(A,50,34)	CKSRYB332K50
C 5213	(A,50,32)	CKSRYB105K16
C 5214	(A,51,37)	CKSRYB152K50
C 5215	(A,59,35)	CKSRYB104K50
C 5216	(A,53,29)	CKSRYB103K50
C 5217	(A,39,33)	CKSRYB473K50
C 5218	(A,38,28)	CKSRYB473K50
C 5219	(A,38,30)	CCSRCH221J50
C 5220	(A,42,24) 10 µF	CCG1223
C 5221	(A,43,13) 10 µF	CCG1223
C 5222	(A,35,12)	CKSRYB105K16
C 5223	(A,35,13)	CKSRYB105K16
C 5224	(A,61,15)	CKSRYB104K50
C 5225	(B,72,10) 22 pF	CCG1140
C 5226	(A,67,7)	CKSRYB223K50
C 5301	(A,74,112) 10 µF	CCG1171
C 5302	(A,69,110)	CCSRCH470J50
C 5303	(A,67,109)	CCSRCH680J50
C 5304	(A,65,114)	CCSRCH5R0C50
C 5305	(A,65,109)	CCSRCH470J50
C 5306	(A,61,109)	CKSRYB104K50
C 5307	(A,62,106)	CSZSR330M10
C 5308	(A,85,110) 10 µF	CCG1171
C 5309	(A,85,108) 10 µF	CCG1171
C 5310	(A,78,110)	CKSRYB104K50
C 5401	(A,46,110)	CCSSCH9R0D50
C 5402	(A,44,110)	CCSSCH9R0D50
C 5403	(A,41,110)	CKSSYB104K10
C 5404	(A,32,110)	CKSSYB104K10
C 5405	(A,30,110)	CKSSYB104K10
C 5406	(A,29,110)	CKSSYB104K10
C 5407	(A,38,110)	CCSSCH4R0C50
C 5410	(A,49,108)	CKSSYB104K10
C 5411	(A,46,108)	CKSSYB104K10
C 5412	(A,42,108)	CKSSYB104K10
C 5413	(A,40,111)	CKSSYB103K16
C 5414	(A,41,108)	CCSSCH181J25
C 5415	(A,40,108)	CKSSYB104K10

Circuit Symbol and No.		Part No.
C 5416	(A,38,108)	CKSSYB104K10
C 5417	(A,27,112)	CKSSYB104K10
C 5418	(A,26,113)	CKSSYB104K10
C 5419	(A,37,108)	CKSSYB104K10
C 5420	(A,36,108)	CKSSYB104K10
C 5421	(A,25,113)	CKSSYB104K10
C 5422	(A,24,113)	CKSSYB104K10
C 5423	(A,34,108)	CKSSYB104K10
C 5424	(A,16,106)	CKSSYB104K10
C 5425	(A,18,108)	CKSSYB104K10
C 5426	(A,18,105)	CKSSYB104K10
C 5427	(A,19,106)	CKSSYB104K10
C 5428	(A,32,108)	CKSSYB104K10
C 5429	(A,28,109)	CKSSYB104K10
C 5430	(A,27,109)	CKSSYB104K10
C 5431	(A,28,108)	CKSSYB104K10
C 5432	(A,26,108)	CKSSYB104K10
C 5433	(A,24,108)	CKSSYB104K10
C 5434	(A,52,105)	CKSSYB104K10
C 5435	(A,52,103)	CKSSYB104K10
C 5436	(A,22,104)	CKSSYB104K10
C 5437	(A,19,99)	CKSSYB104K10
C 5438	(A,52,100)	CKSSYB104K10
C 5439	(A,22,98)	CKSSYB104K10
C 5440	(A,52,98)	CKSSYB104K10
C 5441	(A,21,96)	CKSSYB104K10
C 5442	(A,52,94)	CKSSYB104K10
C 5443	(A,19,94)	CKSSYB104K10
C 5444	(A,21,93)	CKSSYB104K10
C 5445	(A,52,92)	CKSSYB104K10
C 5447	(A,21,90)	CKSSYB104K10
C 5448	(A,21,88)	CKSSYB104K10
C 5449	(A,52,88)	CKSSYB104K10
C 5450	(A,52,86)	CKSSYB104K10
C 5451	(A,21,87)	CKSSYB104K10
C 5453	(A,21,86)	CKSSYB104K10
C 5454	(A,22,84)	CKSSYB104K10
C 5455	(A,22,82)	CKSSYB104K10
C 5456	(A,52,82)	CKSSYB104K10
C 5457	(A,21,80)	CKSRYB105K16
C 5458	(A,50,77)	CKSSYB104K10
C 5459	(A,43,76)	CKSSYB104K10
C 5460	(A,42,77)	CKSSYB104K10
C 5461	(A,40,77)	CKSSYB104K10
C 5462	(A,36,77)	CKSSYB104K10
C 5463	(A,31,77)	CKSSYB104K10
C 5464	(A,30,77)	CKSSYB104K10
C 5465	(A,48,77)	CKSSYB104K10
C 5466	(A,52,75)	CSZSR330M10
C 5467	(A,50,108)	CKSSYB104K10
C 5468	(A,10,116)	CKSRYB104K50
C 5469	(A,17,103)	CKSRYB104K50
C 5503	(A,14,100)	CSZS100M16
C 5505	(A,11,77)	CKSSYB104K10
C 5507	(A,11,87)	CKSSYB104K10
C 5508	(A,13,76)	CKSRYB105K16
C 5509	(A,58,82)	CKSSYB104K10
C 5510	(A,14,71)	CKSRYB105K16
C 5511	(A,8,70)	CKSSYB104K10
C 5512	(A,13,61)	CKSRYB104K50

Circuit Symbol and No.		Part No.
C 5513	(A,10,72)	CSZSR220M16
C 5514	(A,8,79) 4.7 µF	CCG1111
C 5515	(A,8,67)	CKSRYB105K16
C 5516	(A,61,74)	CKSSYB104K10
C 5517	(A,62,77)	CSZS100M16
C 5518	(A,12,60)	CKSRYB104K50
C 5519	(A,27,72)	CKSSYB104K10
C 5520	(A,25,72)	CKSSYB104K10
C 5521	(A,20,74)	CKSRYB104K50
C 5522	(A,14,68)	CKSRYB104K50
C 5523	(A,29,67)	CSZSR220M16
C 5524	(A,24,69)	CSZS100M16
C 5525	(A,21,67)	CKSQYF334Z25
C 5526	(A,16,68) 4.7 µF	CCG1111
C 5527	(A,30,65)	CKSSYB104K10
C 5528	(A,26,65)	CKSSYB104K10
C 5529	(A,22,65)	CKSRYB104K50
C 5530	(A,19,67)	CKSRYB104K50
C 5602	(A,119,47)	CKSRYB105K16
C 5603	(A,136,44)	CSZSC101M10
C 5604	(A,120,55)	CKSRYB104K50
C 5605	(A,108,62)	CKSRYB104K50
C 5606	(A,136,61)	CKSSYB104K10
C 5607	(A,121,75)	CKSRYB104K50
C 5608	(A,101,69)	CKSRYB104K50
C 5609	(A,130,43)	CKSRYB104K50
C 5610	(A,132,41)	CSZSC101M10
C 5701	(A,139,62)	CKSSYB102K50
C 5702	(A,147,62)	CKSSYB102K50
C 5703	(A,145,67)	CKSSYB102K50
C 5704	(A,148,69)	CKSSYB472K25
C 5705	(A,147,67)	CKSSYB472K25
C 5801	(A,102,81)	CSZSR330M10
C 5802	(A,143,55)	CSZSC101M10
C 5803	(A,139,55)	CKSRYB105K16
C 5804	(A,104,79)	CKSRYB105K16
C 5805	(A,107,81)	CSZSR330M10
C 5808	(A,105,82)	CKSRYB105K16
C 5809	(A,111,100)	CKSSYB104K10
C 5810	(A,138,80)	CKSRYB105K16
C 5811	(A,106,88)	CKSRYB105K16
C 5812	(A,106,85)	CKSSYB104K10
C 5813	(A,113,81)	CKSSYB104K10
C 5814	(A,119,82)	CKSSYB104K10
C 5815	(A,145,75)	CKSYB105K16
C 5816	(A,137,53)	CKSYB105K16
C 5824	(A,101,100)	CCSRCH101J50
C 5825	(A,146,115)	CKSRYB105K10
C 5901	(A,137,6) 4.7 µF	CCG1201
C 5903	(A,119,8)	CKSRYB104K50
C 5931	(A,24,9)	CKSRYB104K50
C 5932	(A,9,9)	CKSRYB104K50
C 5933	(A,142,9)	CKSRYB104K50
C 5934	(A,156,9)	CKSRYB104K50
C 5971	(A,77,12)	CKSRYB104K50
C 5972	(A,89,12)	CKSRYB104K50

D

Unit Number : YWX5005

Circuit Symbol and No.			Part No.
Unit Name : DVD Core Unit			
MISCELLANEOUS			
IC 1003	(B,72,42)	IC	S-80859CNNB-B9K
IC 1004	(B,75,48)	Regulator IC	NJM2880U1-05
IC 1005	(B,61,58)	IC	S-L2980A50MC-C7J
IC 1007	(B,82,54)	IC	NJM2885DL1-33
IC 1008	(B,80,63)	IC	R1232D121B
IC 1201	(A,26,15)	IC	BD7996EFV
IC 1301	(B,90,27)	IC	TC7SZ125FU
IC 1351	(B,86,27)	IC	TC7SZ08FU
IC 1352	(B,79,13)	IC	TC74LCX16373FT
IC 1401	(B,61,32)	Flash ROM Unit	CWW1434
IC 1402	(B,37,10)	Flash ROM Unit	CWW1435
IC 1403	(B,47,29)	IC	TC7SZ32FU
IC 1481	(B,60,12)	IC	EDS1232AATA-75
IC 1501	(A,60,19)	IC	MN2DS0016AAUB
IC 1801	(A,70,52)	D/A Converter	PCM1753DBQ
Q 1101	(B,62,50)	Transistor	2SC4081
Q 1102	(B,68,50)	Transistor	2SC4081
Q 1103	(B,60,45)	Transistor	2SB1260
Q 1104	(B,66,45)	Transistor	2SB1260
D 1002	(A,88,66)	Diode	1SR154-400
D 1301	(B,12,10)	Chip LED	CL205IRXTU
L 1004	(B,63,60)	Inductor	CTF1472
L 1005	(B,81,49)	Inductor	CTF1465
L 1006	(B,86,64)	Inductor	CTF1678
L 1007	(B,74,63)	Inductor	CTF1623
L 1101	(B,66,54)	Inductor	CTF1305
L 1482	(B,77,29)	Inductor	CTF1473
L 1502	(A,71,46)	Inductor	CTF1378
L 1503	(A,60,47)	Inductor	CTF1487
L 1504	(A,35,10)	Inductor	CTF1387
L 1511	(A,63,3)	Inductor	CTF1680
L 1601	(A,41,23)	Inductor	CTF1473
L 1602	(A,55,42)	Inductor	CTF1473
L 1603	(A,54,42)	Inductor	CTF1473
L 1604	(A,52,42)	Inductor	CTF1473
L 1605	(A,38,32)	Inductor	CTF1395
L 1671	(A,41,19)	Inductor	CTF1473
L 1672	(A,41,20)	Inductor	CTF1473
L 1673	(A,41,21)	Inductor	CTF1473
L 1801	(A,70,61)	Inductor	CTF1473
L 1901	(A,91,73)	Inductor	CTF1487
L 1902	(A,91,62)	Inductor	CTF1558
X 1501	(A,40,15)	Crystal 27.000 MHz	CSS1714
VR1671	(A,35,20)	Semi-fixed 10 kΩ(B)	CCP1448
EF1501	(A,68,46)	EMI Filter	DTL1106
EF1502	(A,61,44)	EMI Filter	DTL1106
EF1901	(A,87,74)	EMI Filter	DTF1106
EF1903	(A,91,64)	EMI Filter	DTL1106
RESISTORS			
R 1011	(B,72,40)		RS1/16SS104J
R 1014	(B,82,61)		RS1/16SS473J
R 1015	(B,76,60)		RS1/16SS101J
R 1101	(B,63,52)		RS1/16SS391J
R 1102	(B,62,47)		RS1/16SS511J
R 1103	(B,67,53)		RS1/16SS391J

Circuit Symbol and No.		Part No.	Circuit Symbol and No.		Part No.
R 1104	(B,69,47)	RS1/16SS561J	R 1508	(A,86,16)	RAB4CQ104J
R 1107	(B,61,53)	RS1/16SS6R8J	R 1509	(A,86,12)	RAB4CQ104J
R 1108	(B,65,53)	RS1/16SS6R8J	R 1510	(A,78,11)	RAB4CQ104J
R 1109	(B,57,40)	RS1/10S1R5J	R 1511	(A,88,4)	RS1/16SS104J
R 1110	(B,63,40)	RS1/10S1R5J	R 1512	(B,59,3)	RAB4CQ560J
R 1111	(B,70,40)	RS1/10S1R5J	R 1513	(A,44,4)	RS1/16SS102J
R 1112	(B,64,40)	RS1/10S1R5J	R 1514	(A,80,7)	RAB4CQ104J
R 1113	(B,61,40)	RS1/10S1R5J	R 1515	(A,43,3)	RS1/16SS102J
R 1114	(B,59,40)	RS1/10S1R5J	R 1516	(A,76,8)	RS1/16SS103J
R 1115	(B,66,40)	RS1/10S1R5J	R 1518	(A,85,5)	RS1/16SS104J
R 1116	(B,68,40)	RS1/10S1R5J	R 1520	(A,35,8)	RS1/16SS221J
R 1117	(B,64,49)	RS1/16SS104J	R 1521	(A,41,11)	RAB4CQ101J
R 1118	(B,70,49)	RS1/16SS104J	R 1522	(B,56,3)	RAB4CQ560J
R 1202	(A,19,12)	RS1/16SS221J	R 1523	(A,39,11)	RS1/16SS101J
R 1203	(A,19,11)	RS1/16SS221J	R 1524	(A,39,12)	RS1/16SS101J
R 1210	(A,30,27)	RS1/16SS101J	R 1525	(B,53,3)	RAB4CQ560J
R 1211	(B,26,18)	RS1/16SS3R9J	R 1526	(A,36,10)	RS1/16SS270J
R 1212	(B,27,18)	RS1/16SS3R9J	R 1528	(A,43,14)	RS1/16SS101J
R 1214	(B,28,18)	RS1/16SS3R9J	R 1529	(B,53,22)	RAB4CQ560J
R 1215	(B,29,18)	RS1/16SS3R9J	R 1530	(A,43,15)	RS1/16SS105J
R 1216	(B,30,18)	RS1/16SS3R9J	R 1531	(B,50,22)	RAB4CQ560J
R 1217	(B,31,18)	RS1/16SS3R9J	R 1532	(A,77,22)	RS1/16SS103J
R 1219	(A,20,27)	RS1/16SS101J	R 1533	(A,76,27)	RS1/16SS103J
R 1223	(A,19,4)	RS1/16SS753J	R 1534	(A,77,26)	RS1/16SS103J
R 1225	(A,19,7)	RS1/16SS753J	R 1535	(A,63,36)	RS1/16SS221J
R 1227	(B,13,21)	RS1/16SS3R9J	R 1537	(A,67,40)	RS1/16SS221J
R 1228	(B,14,21)	RS1/16SS3R9J	R 1538	(A,66,41)	RS1/16SS221J
R 1229	(B,15,21)	RS1/16SS3R9J	R 1540	(A,70,43)	RS1/16SS102J
R 1230	(B,16,21)	RS1/16SS3R9J	R 1541	(A,64,41)	RS1/16SS472J
R 1231	(B,17,21)	RS1/16SS3R9J	R 1542	(A,60,36)	RS1/16SS223J
R 1232	(B,18,21)	RS1/16SS3R9J	R 1543	(A,59,37)	RS1/16SS332J
R 1233	(B,19,21)	RS1/16SS3R9J	R 1544	(A,57,41)	RS1/16SS183J
R 1234	(B,20,21)	RS1/16SS3R9J	R 1545	(A,61,36)	RS1/16SS223J
R 1240	(B,32,18)	RS1/16SS3R9J	R 1546	(A,59,42)	RS1/16SS104J
R 1241	(B,33,18)	RS1/16SS3R9J	R 1547	(A,59,41)	RS1/16SS473J
R 1242	(B,34,18)	RS1/16SS3R9J	R 1548	(A,59,36)	RS1/16SS104J
R 1243	(B,37,18)	RS1/16SS3R9J	R 1554	(A,60,39)	RS1/16SS221J
R 1244	(B,36,18)	RS1/16SS3R9J	R 1555	(A,57,38)	RS1/16SS221J
R 1245	(B,35,18)	RS1/16SS3R9J	R 1556	(A,43,7)	RS1/16SS104J
R 1301	(B,13,13)	RS1/16SS391J	R 1557	(A,57,39)	RS1/16SS104J
R 1302	(B,15,13)	RS1/16SS471J	R 1559	(A,63,41)	RS1/16SS221J
R 1304	(B,87,23)	RS1/16SS563J	R 1560	(A,68,42)	RAB4CQ104J
R 1305	(B,86,23)	RS1/16SS243J	R 1562	(A,64,38)	RAB4CQ104J
R 1306	(B,85,23)	RS1/16SS683J	R 1565	(A,73,36)	RS1/16SS103J
R 1307	(B,88,23)	RS1/16SS243J	R 1566	(A,72,36)	RS1/16SS103J
R 1314	(B,86,21)	RAB4CQ822J	R 1567	(B,68,22)	RAB4CQ560J
R 1351	(B,84,25)	RS1/16SS331J	R 1568	(B,65,22)	RAB4CQ560J
R 1401	(B,72,33)	RS1/16SS221J	R 1569	(B,62,3)	RAB4CQ560J
R 1402	(B,50,27)	RS1/16SS104J	R 1570	(B,60,22)	RAB4CQ560J
R 1405	(B,48,10)	RS1/16SS221J	R 1571	(B,57,22)	RAB4CQ560J
R 1406	(B,25,4)	RS1/16SS104J	R 1573	(B,63,19)	RS1/16SS560J
R 1407	(B,25,6)	RS1/16SS104J	R 1582	(A,81,25)	RS1/16SS103J
R 1410	(B,47,31)	RS1/16SS104J	R 1583	(A,81,27)	RS1/16SS103J
R 1501	(B,71,3)	RAB4CQ560J	R 1584	(A,77,28)	RS1/16SS103J
R 1502	(A,85,3)	RS1/16SS104J	R 1601	(A,41,25)	RS1/16SS123J
R 1503	(A,71,2)	RS1/16SS560J	R 1602	(A,39,24)	RS1/16SS123J
R 1504	(A,87,23)	RAB4CQ104J	R 1607	(A,41,27)	RS1/16SS105J
R 1505	(B,68,3)	RAB4CQ560J	R 1609	(A,37,28)	RN1/16SE1002D
R 1506	(A,87,19)	RAB4CQ104J	R 1610	(A,43,28)	RS1/16SS222J
R 1507	(B,65,3)	RAB4CQ560J	R 1613	(A,39,28)	RS1/16SS223J

Circuit Symbol and No.			Part No.
R 1614	(A,46,35)		RS1/16SS105J
R 1615	(A,43,32)		RS1/16SS105J
R 1616	(A,53,36)		RS1/16SS2002D
R 1672	(A,43,21)		RS1/16SS303J
R 1673	(A,37,22)		RS1/16SS183J
R 1674	(A,34,23)		RS1/16SS562J
R 1705	(A,55,57)		RS1/16SS101J
R 1706	(A,52,56)		RS1/16SS201J
R 1707	(A,55,51)		RS1/16SS101J
R 1708	(A,52,50)		RS1/16SS201J
R 1715	(A,60,56)		RS1/16SS201J
R 1716	(A,62,57)		RS1/16SS101J
R 1719	(A,60,50)		RS1/16SS201J
R 1720	(A,62,51)		RS1/16SS101J
R 1803	(A,72,56)		RS1/16SS821J
R 1804	(A,74,56)		RS1/16SS821J
R 1805	(A,72,61)		RS1/16SS104J
R 1806	(A,74,61)		RS1/16SS104J
R 1903	(A,89,52)		RS1/16SS0R0J
R 1904	(A,90,59)		RS1/16S0R0J

CAPACITORS

C 1019	(B,58,59)		CCSSCH101J50
C 1020	(B,58,57)		CKSSYB104K10
C 1021	(B,60,60)		CKSRYB105K10
C 1022	(B,79,47)		CKSSYB103K16
C 1023	(B,79,49)		CKSSYB104K10
C 1024	(B,71,48)		CKSQYB475K10
C 1025	(B,64,58)		CKSRYB105K10
C 1026	(B,12,19)		CKSSYB104K10
C 1027	(A,90,53)		CCSSCH101J50
C 1028	(B,89,56)		CKSRYB105K10
C 1029	(B,89,52)		CKSQYB225K10
C 1030	(B,84,59)		CKSQYB106K6R3
C 1031	(B,85,59)		CKSQYB106K6R3
C 1032	(B,82,59)		CKSRYB105K10
C 1033	(B,73,59)		CKSQYB106K6R3
C 1034	(B,73,57)		CKSQYB106K6R3
C 1035	(B,45,27)		CCSSCH101J50
C 1101	(B,61,54)	10 µF	CCG1192
C 1102	(B,58,50)	100 µF	CCG1232
C 1103	(B,65,50)	100 µF	CCG1232
C 1104	(B,63,43)		CKSSYB104K10
C 1105	(B,70,43)		CKSSYB104K10
C 1106	(B,63,45)		CKSSYB103K16
C 1107	(B,70,45)		CKSSYB103K16
C 1108	(A,35,36)		CKSSYB103K16
C 1109	(A,36,33)		CKSRYB105K10
C 1110	(A,35,37)		CKSSYB103K16
C 1111	(A,39,33)		CKSRYB105K10
C 1201	(B,21,11)		CEVW101M16
C 1202	(B,15,17)		CKSYB475K16
C 1207	(B,16,10)		CKSQYB225K10
C 1209	(A,32,17)		CKSSYB104K10
C 1210	(A,32,19)		CKSSYB471K50
C 1211	(A,19,16)		CKSSYB103K16
C 1212	(A,19,8)		CKSSYB104K10
C 1213	(A,19,9)		CKSSYB104K10
C 1301	(B,90,25)		CKSSYB104K10
C 1302	(B,88,25)		CKSSYB104K10
C 1351	(B,86,25)		CKSSYB104K10
C 1352	(B,75,19)		CKSSYB104K10
C 1353	(B,81,19)		CKSSYB104K10
C 1354	(B,74,7)		CKSSYB104K10
C 1355	(B,85,8)		CKSSYB104K10
C 1356	(B,83,28)		CKSYB106K6R3
C 1401	(B,72,31)		CKSSYB103K16
C 1402	(B,49,33)		CKSSYB104K10
C 1403	(B,81,27)		CKSQYB475K6R3
C 1405	(B,48,8)		CKSSYB103K16
C 1406	(B,25,15)		CKSSYB104K10
C 1407	(B,74,27)		CKSQYB475K6R3
C 1408	(B,47,27)		CKSSYB104K10
C 1481	(B,72,5)		CKSSYB104K10
C 1482	(B,72,7)		CKSSYB104K10
C 1483	(B,67,5)		CKSSYB104K10
C 1484	(B,63,5)		CKSSYB104K10
C 1485	(B,56,5)		CKSSYB104K10
C 1486	(B,53,5)		CKSSYB104K10
C 1487	(B,51,5)		CKSSYB104K10
C 1488	(B,49,5)		CKSSYB104K10
C 1490	(B,68,19)		CKSSYB104K10
C 1491	(B,77,27)		CKSQYB106K6R3
C 1492	(B,55,19)		CKSSYB104K10
C 1493	(B,52,19)		CKSSYB104K10
C 1494	(B,65,19)		CKSSYB104K10
C 1496	(B,65,5)		CKSSYB102K50
C 1497	(B,61,19)		CKSSYB102K50
C 1498	(B,77,26)		CKSSYB102K50
C 1499	(B,49,4)		CKSSYB102K50
C 1501	(A,68,44)		CKSQYB106K6R3
C 1502	(A,58,43)		CKSQYB106K6R3
C 1503	(A,55,3)		CKSSYB104K10
C 1504	(A,58,3)		CKSSYB104K10
C 1505	(A,53,3)		CKSSYB104K10
C 1506	(A,60,3)		CKSSYB104K10
C 1507	(A,68,2)		CKSSYB104K10
C 1508	(A,65,3)		CKSSYB104K10
C 1509	(A,69,2)		CKSSYB104K10
C 1510	(A,43,11)		CKSSYB104K10
C 1511	(A,76,7)		CKSSYB104K10
C 1512	(A,76,11)		CKSSYB104K10
C 1513	(A,43,10)		CKSSYB104K10
C 1514	(A,76,17)		CKSSYB104K10
C 1515	(A,43,16)		CKSSYB104K10
C 1516	(A,76,15)		CKSSYB104K10
C 1517	(A,43,17)		CKSSYB104K10
C 1518	(A,37,14)		CCSSCH8R0D50
C 1519	(A,37,16)		CCSSCH8R0D50
C 1521	(A,76,24)		CKSSYB104K10
C 1522	(A,77,24)		CKSSYB104K10
C 1523	(A,58,36)		CKSSYB104K10
C 1524	(A,57,37)		CKSSYB103K16
C 1525	(A,66,36)		CKSSYB104K10
C 1526	(A,62,40)		CKSSYB103K16
C 1527	(A,63,35)		CKSSYB471K50
C 1528	(A,65,36)		CKSSYB104K10
C 1529	(A,60,38)		CKSSYB103K16
C 1530	(A,59,39)		CKSSYB224K6R3

Circuit Symbol and No.			Part No.
C 1531	(A,57,42)		CKSSYB123K16
C 1536	(A,76,20)		CKSSYB104K10
C 1537	(A,55,43)		CKSSYB102K50
C 1538	(A,53,43)		CKSSYB102K50
C 1539	(A,57,36)		CKSSYB104K10
C 1540	(A,61,38)		CKSSYB103K16
C 1560	(A,51,3)		CKSSYB104K10
C 1577	(A,77,30)		CKSSYB104K10
C 1601	(A,41,24)		CCSSCH101J50
C 1602	(A,43,24)		CCSSCH101J50
C 1603	(A,37,23)		CCSSCH680J50
C 1604	(A,39,25)		CCSSCH680J50
C 1608	(A,41,26)		CKSSYB103K16
C 1609	(A,43,26)		CKSSYB103K16
C 1610	(A,53,39)		CCSSCH101J50
C 1611	(A,53,37)		CKSSYB562K25
C 1612	(A,55,36)		CKSSYB224K6R3
C 1613	(A,55,37)		CKSSYB224K6R3
C 1614	(A,56,37)		CKSSYB333K16
C 1615	(A,41,30)		CKSRYB105K10
C 1616	(A,48,36)		CKSSYB104K10
C 1617	(A,49,38)		CKSSYB104K10
C 1618	(A,51,38)		CKSSYB104K10
C 1619	(A,51,36)		CKSSYB104K10
C 1620	(A,50,36)		CKSSYB104K10
C 1621	(A,50,38)		CKSSYB104K10
C 1622	(A,52,38)		CKSSYB104K10
C 1623	(A,52,39)		CKSSYB104K10
C 1624	(A,43,27)		CKSSYB103K16
C 1625	(A,56,36)		CKSSYB104K10
C 1626	(A,41,31)		CKSRYB105K10
C 1627	(A,43,23)		CKSSYB104K10
C 1628	(A,54,36)		CKSSYB104K10
C 1629	(A,49,36)		CKSSYB104K10
C 1630	(A,38,30)		CKSQYB106K6R3
C 1671	(A,43,18)		CKSSYB104K10
C 1672	(A,43,19)		CKSSYB104K10
C 1673	(A,37,21)		CKSSYB104K10
C 1674	(A,39,21)		CKSSYB104K10
C 1675	(A,39,19)		CKSRYB105K10
C 1676	(A,37,19)		CKSRYB105K10
C 1677	(A,43,22)		CKSSYB104K10
C 1801	(A,74,52)		CKSSYB104K10
C 1802	(A,67,58)	10 µF	CCG1192
C 1803	(A,67,56)		CKSSYB104K10
C 1804	(A,69,58)	10 µF	CCG1192
C 1805	(A,69,56)		CKSSYB104K10
C 1808	(A,72,57)		CCSRCH182J50
C 1809	(A,75,57)		CCSRCH182J50
C 1810	(A,72,59)		CKSQYB475K6R3
C 1811	(A,74,59)		CKSQYB475K6R3
C 1901	(A,84,74)		CKSSYB102K50

E

Unit Number : CWX3154
Unit Name : Compound Unit(A)

Q 1299	Photo-taransistor	CPT231SCTD
S 1201	Spring Switch(12cm)	CSN1069
S 1202	Spring Switch(8cm)	CSN1069
S 1203	Spring Switch(DISC SENS)	CSN1069
S 1204	Spring Switch(DISC SENS)	CSN1070
S 1205	Spring Switch(8cm)	CSN1070
R 1298		RS1/16S0R0J
R 1299		RS1/16S0R0J

F

Unit Number : CWX3394
Unit Name : Compound Unit(B)

S 1206	Switch(CLAMP)	CSN1067

OPT/RCA Unit
Consists of
OPT PCB
RCA PCB

G I

Unit Number :
Unit Name : OPT/RCA Unit

MISCELLANEOUS

IC 4201	(A,35,16)	L-MOS And Gate	TC7SET08FUS1
D 4201	(A,42,16)	Diode	UDZS5R6(B)
D 4202	(A,42,11)	Diode	UDZS5R6(B)
L 4201	(A,28,14)	Inductor	CTF1379
L 4202	(A,59,24)	Inductor	CTF1389

RESISTORS

R 4201	(A,24,14)	RS1/16S0R0J
R 4203	(A,25,17)	RS1/16S221J
R 4204	(A,28,17)	RS1/16S621J
R 4205	(A,31,16)	RS1/16S473J
R 4206	(A,32,13)	RS1/16S0R0J
R 4207	(A,38,16)	RS1/16S121J
R 4211	(A,68,6)	RS1/16S0R0J

CAPACITORS

C 4202	(A,28,16)	CCSRCH150J50
C 4203	(A,37,18)	CKSRYB104K50
C 4204	(A,38,13)	CKSYB106K10
C 4207	(A,62,16)	CKSRYB104K50
C 4301	(A,17,13)	CKSRYB102K50

K

Unit Number : CXX2316
Unit Name : Main PCB Unit(SERVICE)

MISCELLANEOUS

IC 101	IC	BA00CC0WFP
IC 102	IC	BA6247FP
IC 103	Photo-interrupter	GP2L24B
IC 104	IC	TC7W14FU
IC 105	Photo-interrupter	GP2L24B

Circuit Symbol and No.		Part No.
Q 101	Transistor	DTC124EUA
D 101	Diode	UDZS5R6(B)

RESISTORS

R 101		RS1/16S102J
R 102		RS1/16S3302D
R 103		RS1/16S3900D
R 104		RS1/16S4701D
R 105		RS1/16S471J
R 106		RS1/16S102J
R 107		RS1/16S102J
R 108		RS1/16S102J
R 109		RS1/16S102J
R 110		RS1/16S102J
R 111		RS1/16S562J
R 112		RS1/16S102J
R 113		RS1/16S102J
R 114		RS1/16S102J
R 115		RS1/16S562J
R 116		RS1/16S102J
R 117		RS1/16S472J

CAPACITORS

C 101		CKSYB475K16
C 102		CKSYB475K16
C 103		CKSRYB104K16
C 104		CKSRYB104K16
C 105		CKSRYB223K16
C 106		CKSRYB104K16
C 107		CKSRYB223K16
C 108		CEVW101M16
C 109		CKSRYB104K16
C 110		CCSRCH102J50
C 111		CCSRCH102J50

L

Unit Number : CZW5029
Unit Name : Switch PCB Unit

S 101	Switch(Angel sw)	CSN1068

M

Unit Number : CZW5028
Unit Name : Volume PCB Unit

VR101	Volume(Angel sense)	CCW1025

Miscellaneous Parts List

	Pickup Unit(Service)	CXX2118
M 1	Motor Unit(LOADING)	CXC4912
M 2	Motor(STEPPING)	CXM1364
M 3	Motor(SPINDLE)	CXM1362

Pioneer sound.vision.soul

Service Manual

ORDER NO.
CRT3896

DVD MECHANISM MODULE(MS5)

CX-3212

● **This service manual describes the operation of the DVD mechanism module incorporated in models listed in the table below.**
● **When performing repairs use this manual together with the specific manual for model under repair.**

Model	Service manual	DVD Mechanism Module
AVIC-D3/XU/UC AVIC-D3/XU/EW5	CRT3879	CXK6601

CONTENTS

1. CIRCUIT DESCRIPTIONS 2
2. MECHANISM DESCRIPTIONS 19
3. DISASSEMBLY 24

PIONEER CORPORATION 4-1, Meguro 1-chome, Meguro-ku, Tokyo 153-8654, Japan
PIONEER ELECTRONICS (USA) INC. P.O. Box 1760, Long Beach, CA 90801-1760, U.S.A.
PIONEER EUROPE NV Haven 1087, Keetberglaan 1, 9120 Melsele, Belgium
PIONEER ELECTRONICS ASIACENTRE PTE. LTD. 253 Alexandra Road, #04-01, Singapore 159936

ⓒ**PIONEER CORPORATION 2007**

K-ZZU. FEB. 2007 Printed in Japan

1. CIRCUIT DESCRIPTIONS

1. Front end section (MN2DS0016AAUB : IC1501)

MN2DS0016AAUB is a 1 chip LSI for DVD-Player. A DVD-Player system can be constructed by connecting this LSI, driver IC, SDRAM, Flash-ROM, Audio-DAC, etc.

This LSI includes a front end (SODC/FE) which executes RF signal processing, servo processing and decode processing, a back end (AV decoder/BE) which executes video decode processing such as MPEG1/MPEG2/JPEG and audio decode processing such as DVD-Audio/Dolby Digital ^{2} /DTS/MP3, and a system controller which controls the system.

The front end section realizes optical head signal computation processing and RF signal processing, digital signal processing (16-8 demodulation, error correction) for DVD-ROM playback according to the DVD specifications, digital signal processing of CD-DA/CD-ROM (error correction), AV decoder transfer, servo control, spindle motor control and seek control.

In the case of MN2DS0016AAUB, the front end servo system waveforms, such as FE, TE and AS, are not observed as in the case of DVD mechanism module (MS4) CX-3183. Please pay attention.

1.1 Analog block (MN2DS0016AAUB : IC1501)

The functions of the analog block are as described below.

1. Reference power circuit
2. SERVO system/DPD system signal processing circuit
   Gain switching amplifier and Low Pass Filter (LPF)
3. RF signal processing circuit
   RF adding circuit, circuit to make inline, Variable Gain Amplifier (VGA) circuit
4. Laser power control (LPC) circuit
5. A/D converter for SERVO (10 bit, DPD system-4ch), PWM

1.1.1 APC circuit

The optical output of the laser diode (LD) has a large negative temperature characteristic.

Therefore, if the LD is driven by a constant current, a constant optical output cannot be obtained.

APC circuit is a circuit to control the current so that the output at the monitor diode (MD) will be constant.

MN2DS0016AAUB includes 2 types of APC circuit, one for DVD and the other for CD.

The LD current can be obtained by dividing the measured voltage between DVDLD1 (CDLD1) and 5 V by 6 Ω (1.5 Ω x 4=6 Ω), in the case of DVD (CD). It will be approximately 50 mA (45 mA) in the case of DVD (CD).

The potential difference between DVDLD1(CDLD1) and 5 V is set to approx. 300 mV(270 mV).

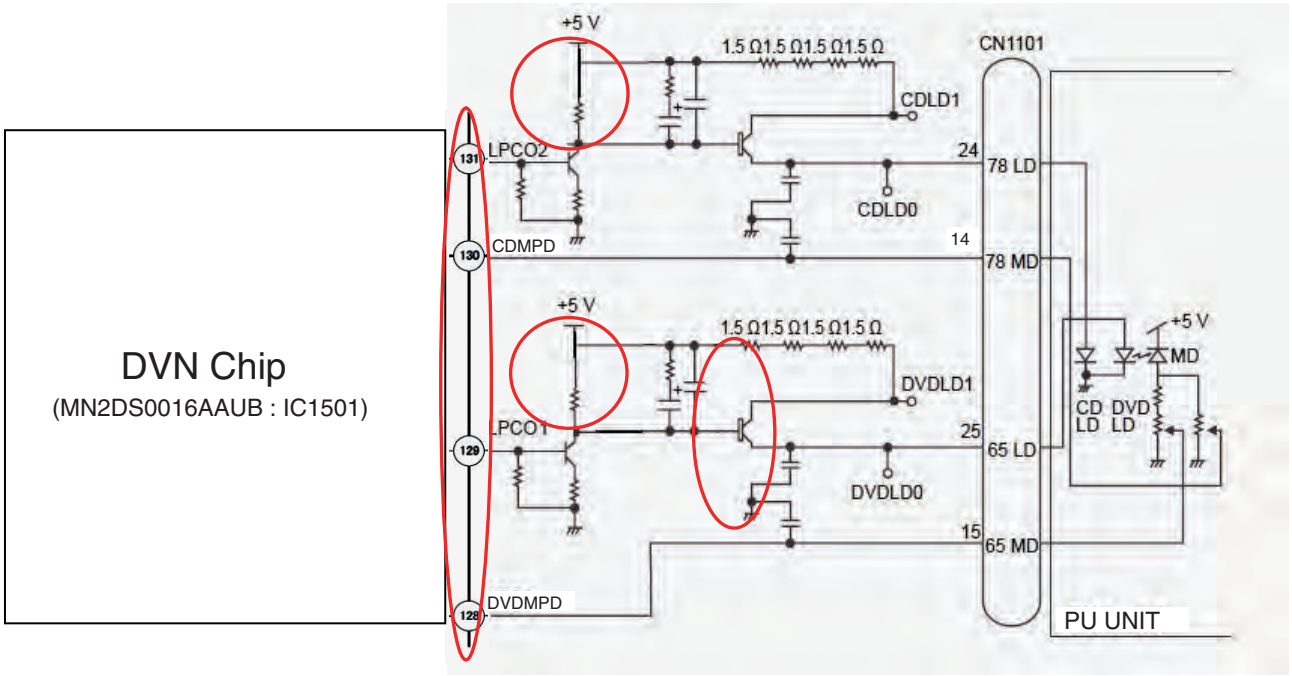

1.1.2 FE forming circuit

Focus error (FE) forming circuit

The signal from PU, FE1 and FE2, are AD converted inside IC1501 and captured. After that, a differential is obtained by taking the offset cancellation into consideration, and FE is obtained.

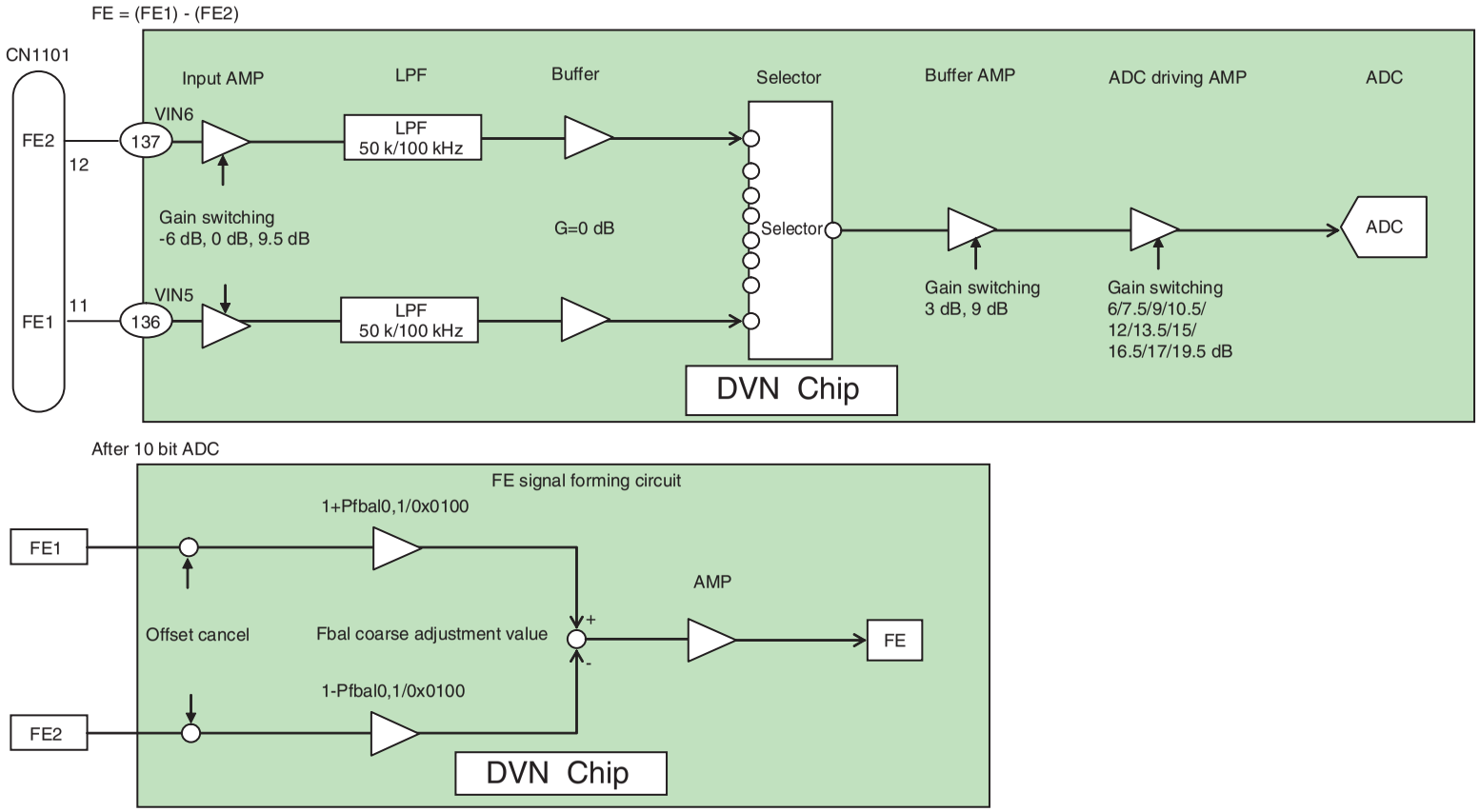

1.1.3 TE forming circuit

Tracking error (TE) forming circuit

In the case of a DVD, the phase difference method is used for TE forming, and the TE is formed from the phase difference among (A+C) and (B+D).

In the case of a CD, 3 beam method is used, and after entering the signal into a variable amplifier for tracking offset adjustment via an external resistor, it is AD converted, and a TE is formed by the equation of TE=(E+G_E+F)-(F+H_G+H).

• DVD (phase difference TE)

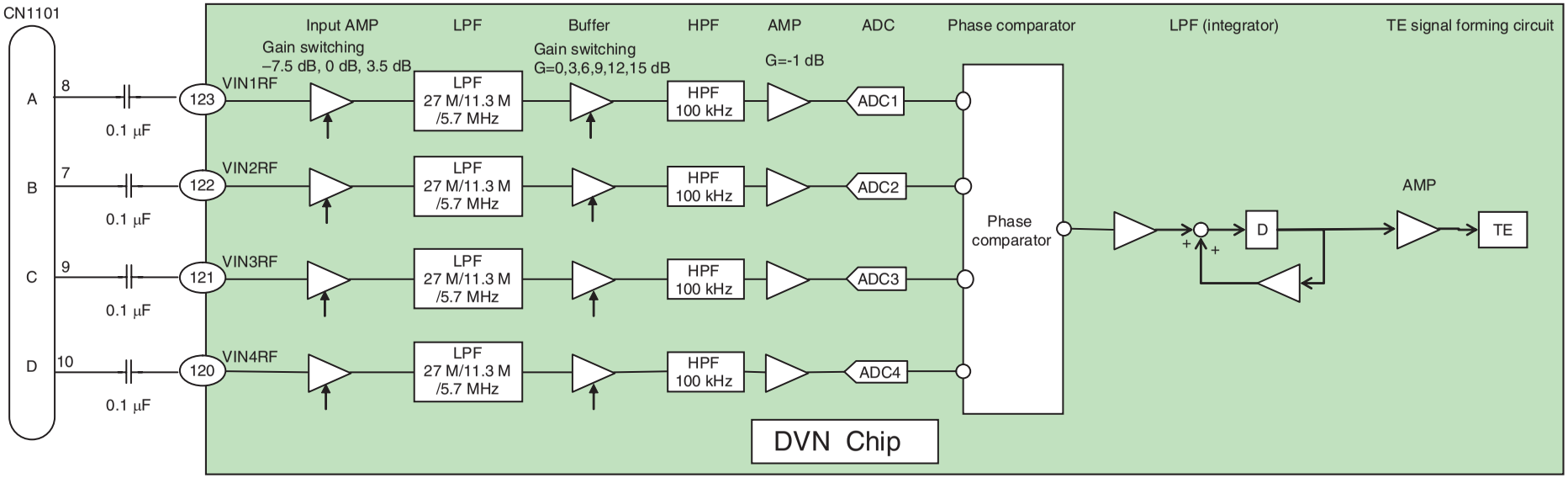

• CD (3 beam TE)

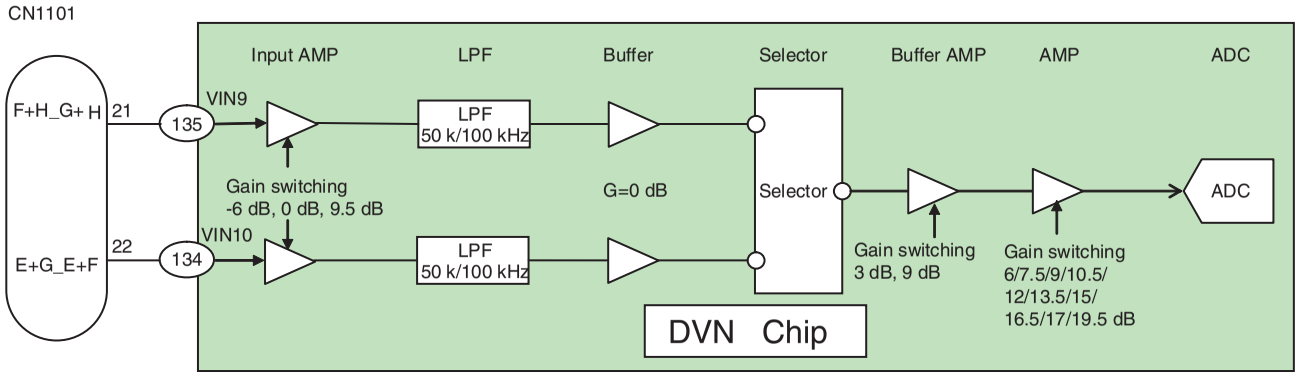

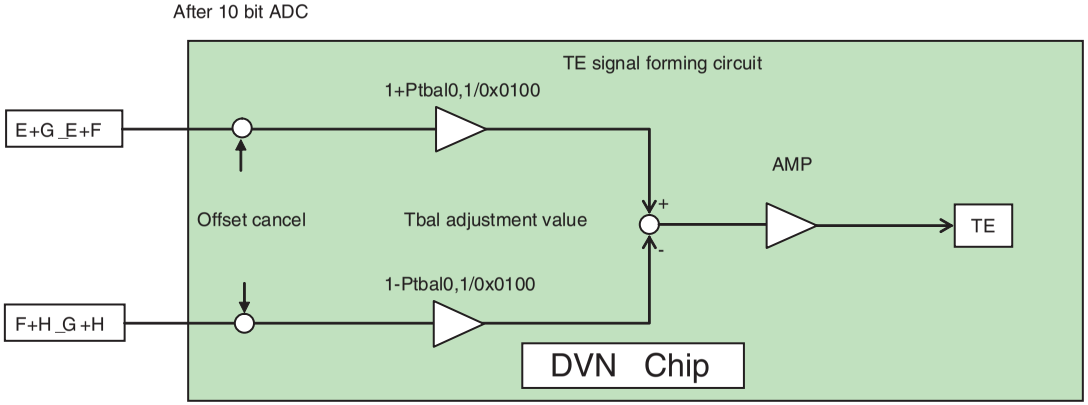

CX-3212

1.2 Servo block (MN2DS0016AAUB : IC1501)

At the servo block, focusing, tracking, servo control of traverse, spindle motor control and seek control are performed.

1.2.1 Focus close

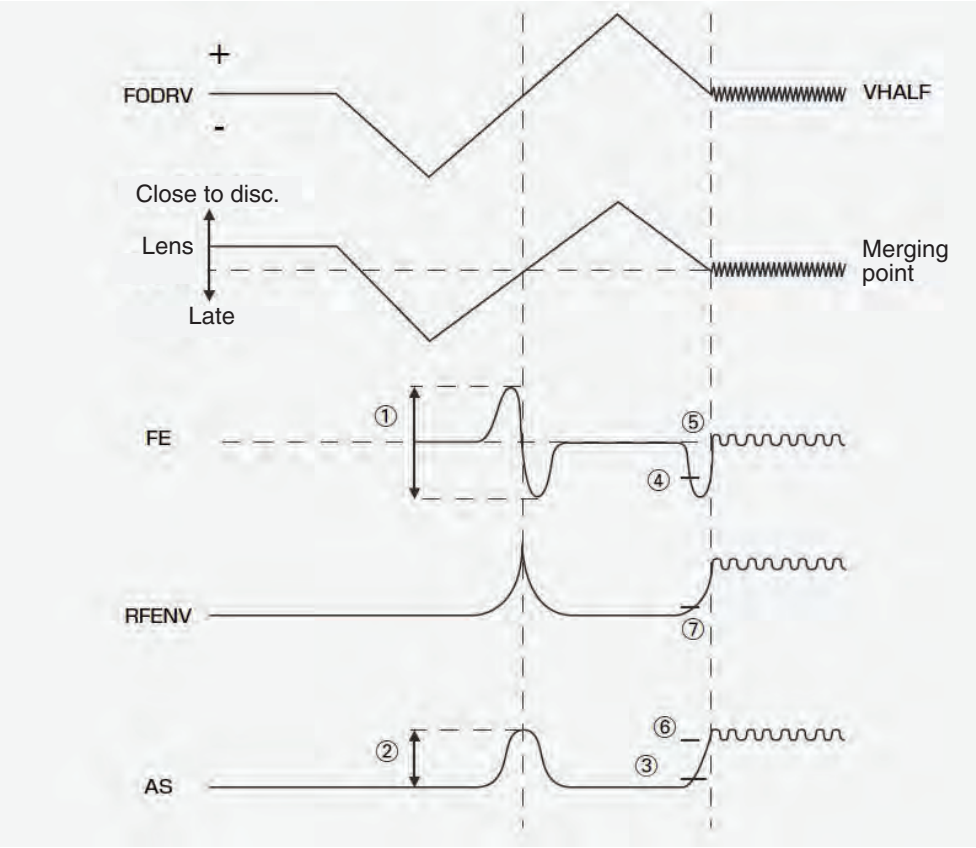

After issuing the focus close command, both the DVD and the CD will perform the following processing.

1. Measurement and optimization of the signal level.
   First the PU lens is driven in the direction getting away from the disc, then it is driven in the direction getting close to the disc. At this time, each signal level of FE, AS and RFENV are measured at the focused focal point that the lens passes, and the levels of FE and AS are optimized. (1 and 2 in the figure)
2. Focus adjustment
   Next, after detecting the drawing level of FE and AS by driving the lens away from the disc, the focus loop filter is activated and the focus is drawn. (3~6)
3. Confirmation of adjustment
   Confirm the drawing at the signal level of AS and RFENV. (6, 7)
   The signal levels of FE, AS and RFENV and the focus drive voltage can be checked by the focus search in the test mode.

1.2.2 Tracking close

After issuing the tracking close command, both the DVD and the CD will perform the following processing.

1. Tracking brake
   1/2 cycle of the track cross is measured and if the cycle is within the specified range, the brake pulse is output. The output direction of the brake pulse is determined by the phase relationship of the OFTR and the TKC (binary signal of TE) signals. When it is confirmed that the swinging of the lens against the disc has been controlled, braking will be stopped and enters into drawing. If the drawing conditions are not met within 10 msec, after the brake output, the brake will be ended and entered into drawing.
2. Tracking adjustment
   Tracking drive hold processing by the OFTR signal will be performed.
3. Confirmation of adjustment
   Checking is made that the number of track jumps within the specified period of time are at the designated numbers or less. The time out for confirmation of adjustment is 8.4 msec. and retry is performed by the command from the microcomputer.

1.2.3 Track jump

In this system, one of the three methods, interval jump, multi jump or traverse seek, is selected depending on the number of target moving tracks.

1. Interval jump
   Detailed seek can be performed to execute repeated track jump of 1 track, and it is used when the target track gets close or at the time of seek operation to the adjacent track.
2. Multi jump
   Both edges of the track cross signal TKC are counted, and track count move of the designated number is executed. Furthermore, the stepping motor is driven according to the number of jumps.
3. Traverse seek
   The stepping motor is controlled by F/W. Track count by TKC is not performed, and the stepping motor is moved according to the number of jumps. In the case of a DVD, seek is performed by maintaining the pick up at the mid point using the mid point servo by the microcomputer.
   It indicates the setting for jump switching common to DVD and CD.
   Types of target move number of jumps.

DVD
1~10 Interval jump
11~500 Multi jump
501~878 Combination of multi jump and interval jump
879~1756 Traverse seek (short)
1757~ Traverse seek (long)

CD
1~10 Interval jump
11~400 Multi jump
401~780 Combination of multi jump and interval jump
781~928 Traverse seek (short)
929~ Traverse seek (long)
The waveform of track jump is shown on the next page.

Tracking-on process

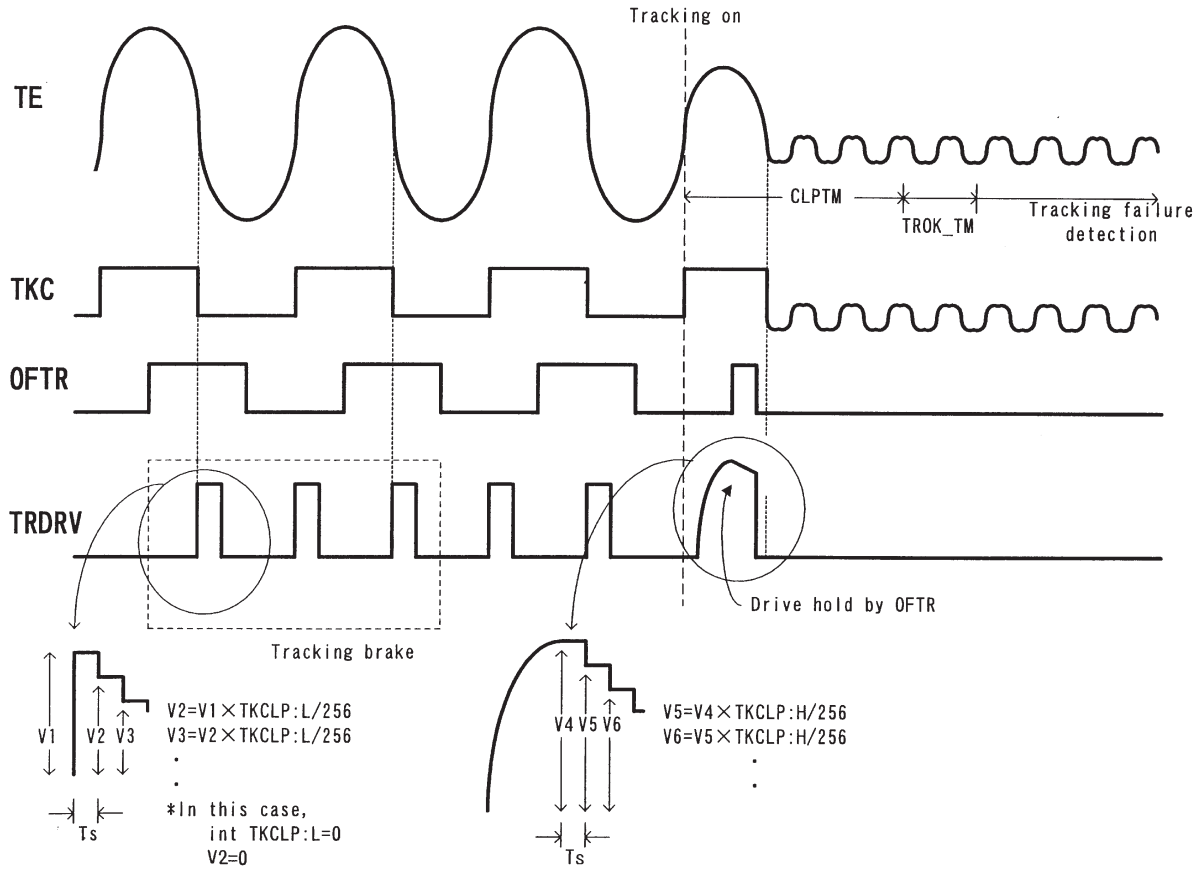

Interval jump (1 track) DVD

Outer peripheral jump

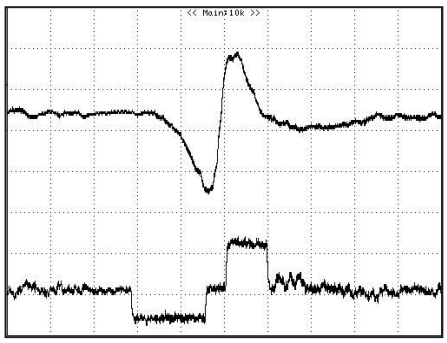

Inner peripheral jump

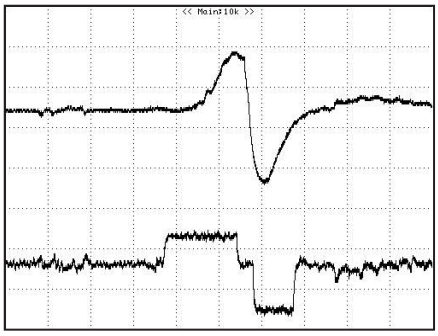

Multi jump (32 track) DVD

Outer peripheral jump

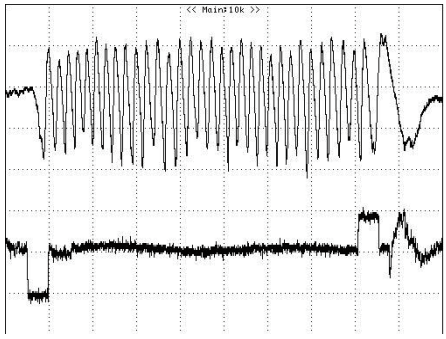

Inner peripheral jump

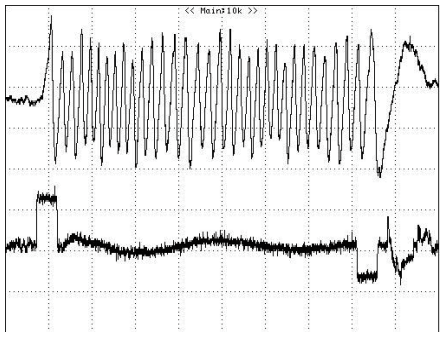

Traverse seek (900 tracks)

A ± and B ± are measured by setting the LPF of the oscilloscope to 10 kHz.

Outer peripheral jump

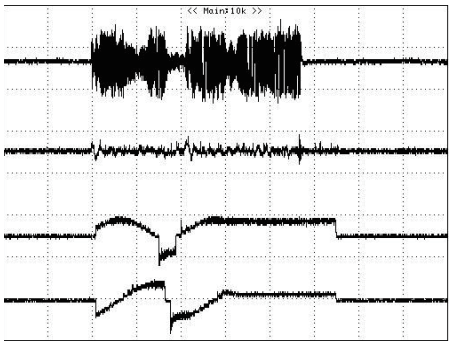

Inner peripheral jump

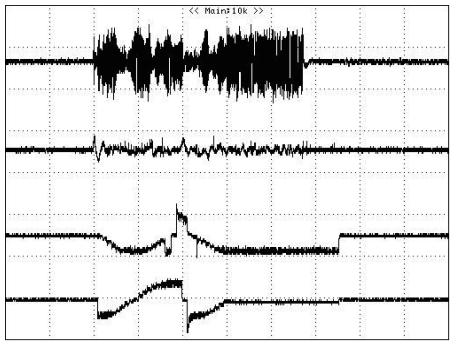

Traverse seek (10 000 tracks)

Outer peripheral jump

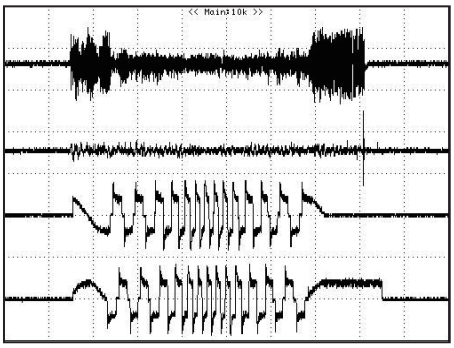

Inner peripheral jump

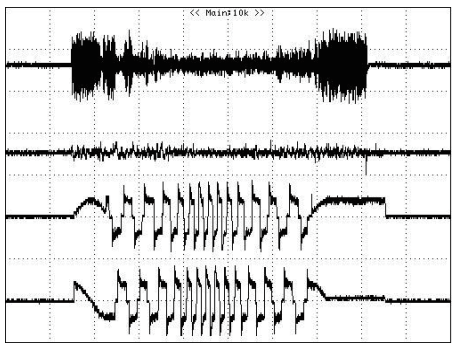

1.2.4 Focus jump

Focus jump is a function compatible to 2 layers on one side or 2 layers on both sides. Looking from the object lens, the layer close to the lens is called “layer 0” (L0) and the layer away from the lens is called “layer 1” (L1).

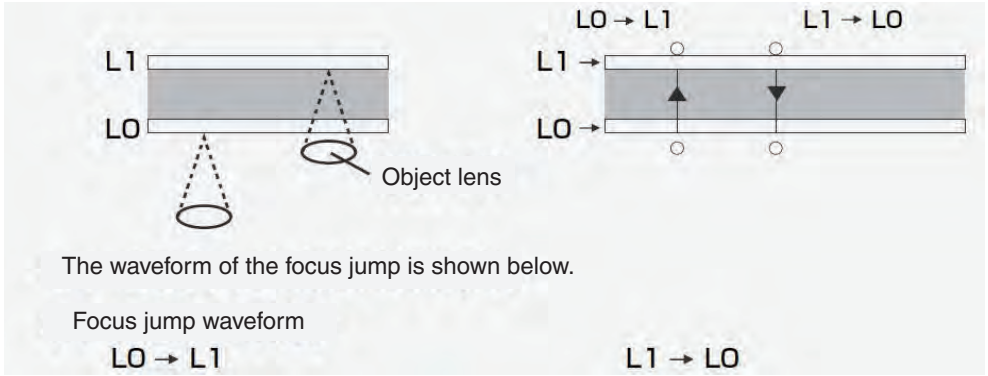

The waveform of the focus jump is shown below.

Focus jump waveform

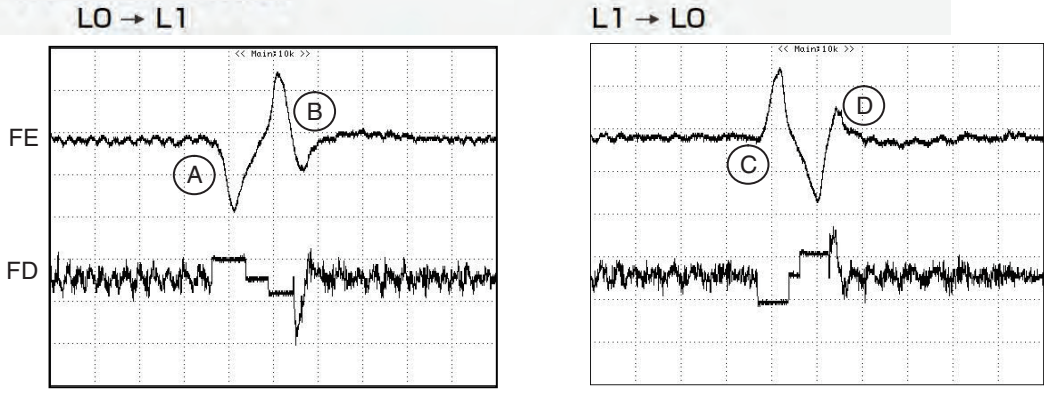

The flow of the focus jump is shown below.

1. The tracking is opened by the layer being played back.
2. A command is issued to execute jump to the target layer.
3. The tracking is closed at the layer after the jump and the playback is resumed.

Incidentally, the process when the jump command is issued is as described below.

1. The lens is accelerated to the target layer until the FE signal detects the focus jump acceleration end level. Acceleration will be ended by force, however, if the time for acceleration timeout has elapsed before detecting the acceleration end level.
2. The drive voltage is not output until the FE signal detects the speed reduction start level, and the lens is moved by inertia.
3. The lens speed is reduced from detection of the speed reduction start level until detection of the speed reduction end level. Speed reduction will be ended by force, however, if the time for speed reduction timeout has elapsed before detecting the speed reduction end level.

1.3 Auto adjustment function

All circuit adjustments are automated in this system.
Details of each auto adjustment are explained below.

1.3.1 VIN1, VIN2, VIN3, VIN4, VIN5, VIN6, VIN9, VIN10 offset cancel

Each signal from VIN1~6, 9 and 10 output by PU is converted to a digital signal by the AD converter in the servo block. Offset cancel is a function to cancel input offset of the AD converter at the time of power ON.

1.3.2 VCO gain adjustment (VARI adjustment)

It has a function to absorb variation of VCO gain among individual LSI by learning so that auto adjustment is made to maintain the VCO gain at a certain level. VCO is locked against the reference frequency for learning.
And, a frequency control value (FCNT) is read, and VARI register is adjusted so that the read value becomes the same as the target FCNT value.

1.3.3 FE normalization adjustment

FE signal level measured at the time of focus close is adjusted so that it will become 190LSB at the digital equalizer input stage.

1.3.4 Tracking balance (TBAL) adjustment
At the time of focus close and tracking open, the lens is oscillated in the track direction and the balanced point where the DC offset becomes zero is searched and adjusted by using the Newton-Raphson method.

1.3.5 Learning of tracking error amplitude
At the time of focus close and tracking open, the lens is oscillated in the track direction and adjusted so that the TE amplitude level becomes 190 LSB at the digital equalizer input stage.

1.3.6 OFTR adjustment
The binary threshold level is adjusted to make the OFTR signal into a binary digit.

1.3.7 RF gain adjustment
The gain setting is adjusted by the VGA value in order to set the gain setting of the RF forming circuit to an optimum one according to the PU output.

1.3.8 Focus balance (FBAL) adjustment
The focus position is adjusted so that the RFENV will be the maximum at the time of focus close · tracking open and tracking close.

1.3.9 Focus gain adjustment, tracking gain adjustment
At the time of tracking close, a disturbance is entered into the servo loop to adjust to the target gain intersection.

1.3.10 AS normalization adjustment
The AS signal level is measured for the designated number of samples at the time of track closing, and after A/D conversion at the ADSC, it is fine adjusted to become 64 LSB at the digital equalizer input stage.

All auto adjustments can be confirmed by displaying the adjustment result in the test mode.
The list of auto adjustment coefficient

State	Coefficient	DVD	CD
Power ON	VIN1 offset	06B7~08CD	-
	VIN2 offset	06B7~08CD	-
	VIN3 offset	06B7~08CD	-
	VIN4 offset	06B7~08CD	-
	VIN5 offset	06B7~08CD	06E1~08A3
	VIN6 offset	06B7~08CD	06E1~08A3
	VIN9 offset	-	06B7~08CD
	VIN10 offset	-	06B7~08CD
F close	FE MAX	0E48~36CD	13A5~469A
	FE MIN	C933~F1B8	B966~EC5B
	AS MAX	037B~1BD9	0978~3DDC
	FE normalization	01DD~05B4	016A~045B
F close (after TBAL)	TE MAX	1518~47E0	0337~381A
	TE MIN	B820~EAE8	C7E6~FCC9
	TE normalization	017C~0320	0230~08AF
T close	F gain	0100~0400	←
	T gain	0100~0400	←
	AS normalization	024C~125F	0168~0399

Note) Coefficient values are indicated in hexadecimals. In all cases, specifications at the production line are described. For discs, TDV-582 is used for DVD and TCD-792 is used for CD.

1.4 CIRC block (MN2DS0016AAUB : IC1501)
The CIRC block includes the digital signal processing function (EFM modulation and error correction) of CD-DA and CD-ROM and the digital servo processing function of the spindle motor.

1.5 DRC block (MN2DS0016AAUB : IC1501)
The digital read channel (DRC) is equipped with A/D converter, digital equalizer (DEQ), Adaptive filter, Viterbi detector, digital PLL circuit, RISC interface and periphery circuits for reading of signal on optical disc.

1.6 ATAPI I/F(MS5 base model)

[Outline]
The ATAPI interface is a ATAPI protocol control circuit compatible to ATA/ATAPI-5.
The register of the control section can be directly accessed from the system controller, and the data transfer is made via the SODC internal bus.

◉ ATAPI interface

* When viewed from ↓ DVD-LSI.

Signal Name	Bits	I/O	Description
HDD[15:0]	16	I/O	ATAPI data input/output
NCS[1:0]	2	I	ATAPI host chip select
DA[2:0]	3	I	ATAPI host address
NIORD	1	I	ATAPI host data read out
NIOWR	1	I	ATAPI host data write
IORDY	1	O	ATAPI host ready output
DMARQ	1	O	DMA request to ATAPI host
NDMACK	1	I	DMA response from ATAPI host
INTRQ	1	O	Interrupt request to ATAPI host
NDASP]	1	O	ATAPI drive information
NPDIAG	1	O	ATAPI slave・master diagnosis
NRESET	1	I	ATAPI host hard reset
MASTER	1	I	ATAPI slave・master selection

◉ ATAPI specifications

• Compatible transfer mode

PIO	mode 0 to 4
Single word DMA	mode 0 to 2
Multi word DMA	mode 0 to 2
Ultra DMA	mode 0 to 4

• 64 Byte data FIFO for host I/F is built-in.
• Auto capturing function of ATAPI command packet is built-in.
• Master ・slave compatible

◉ ATAPI connection configuration

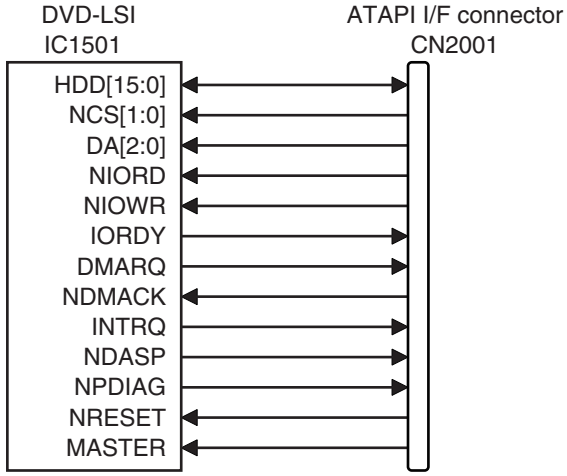

1.7 Power Supply Map(MS5 base model)

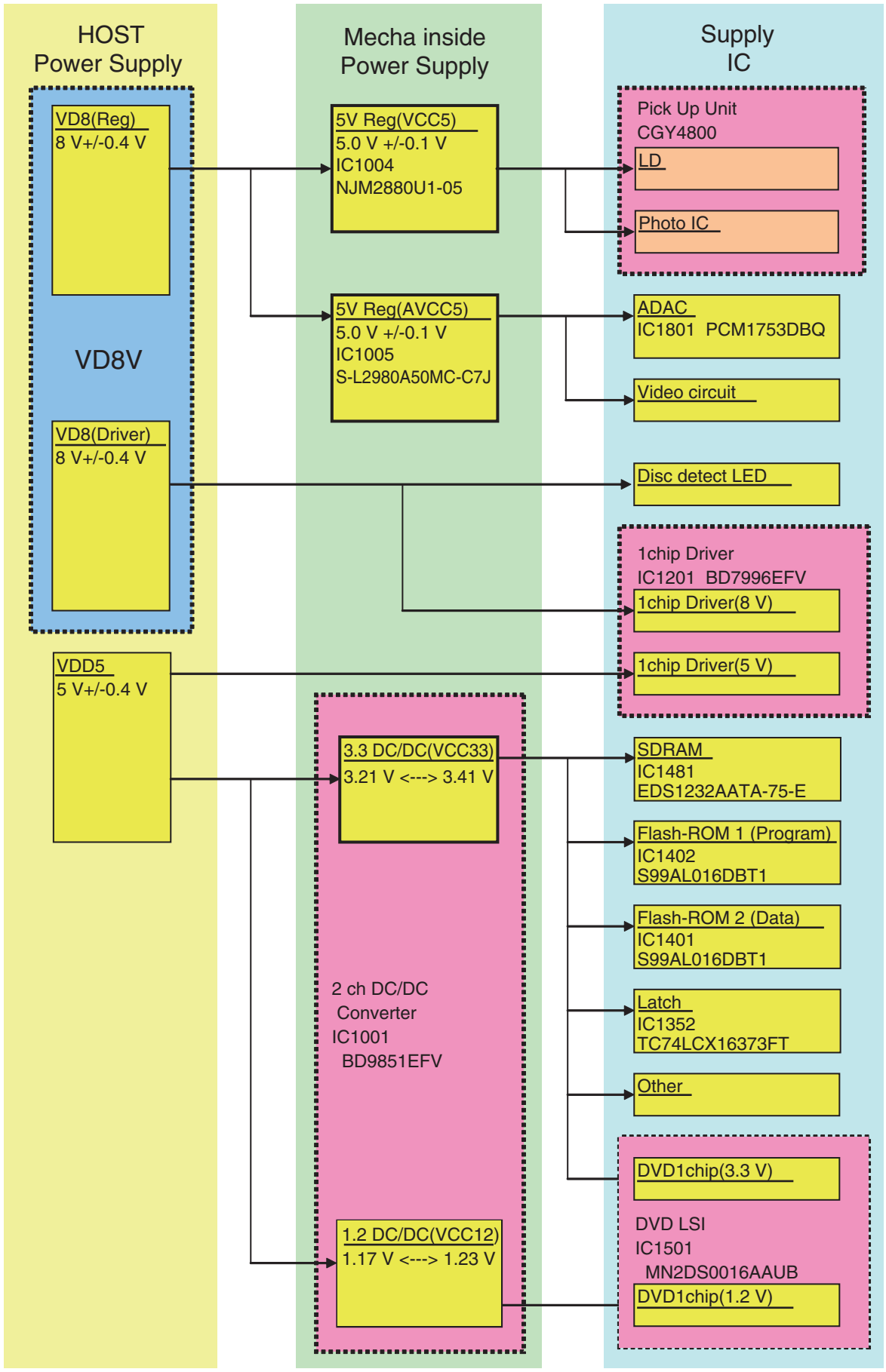

Power Supply Map(MS5AV code2 model)

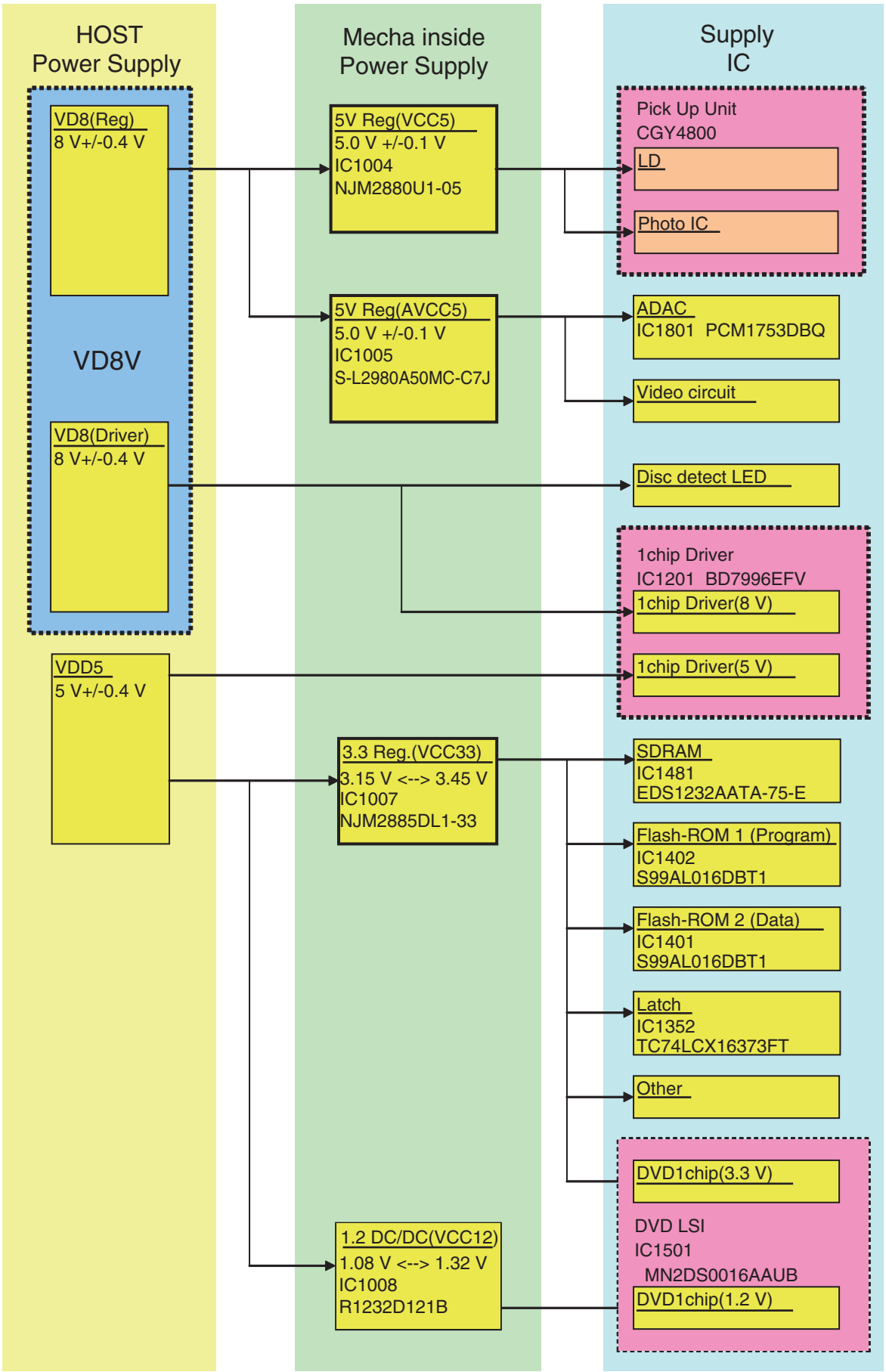

1.8 Clock circuit

[Outline]
By connecting a 27 MHz crystal oscillator to DVD-LSI (IC1501), DACCLK for externally connected Audio-DAC is formed and supplied by the clock generator inside the DVD-LSI in addition to the clock used inside the LSI.

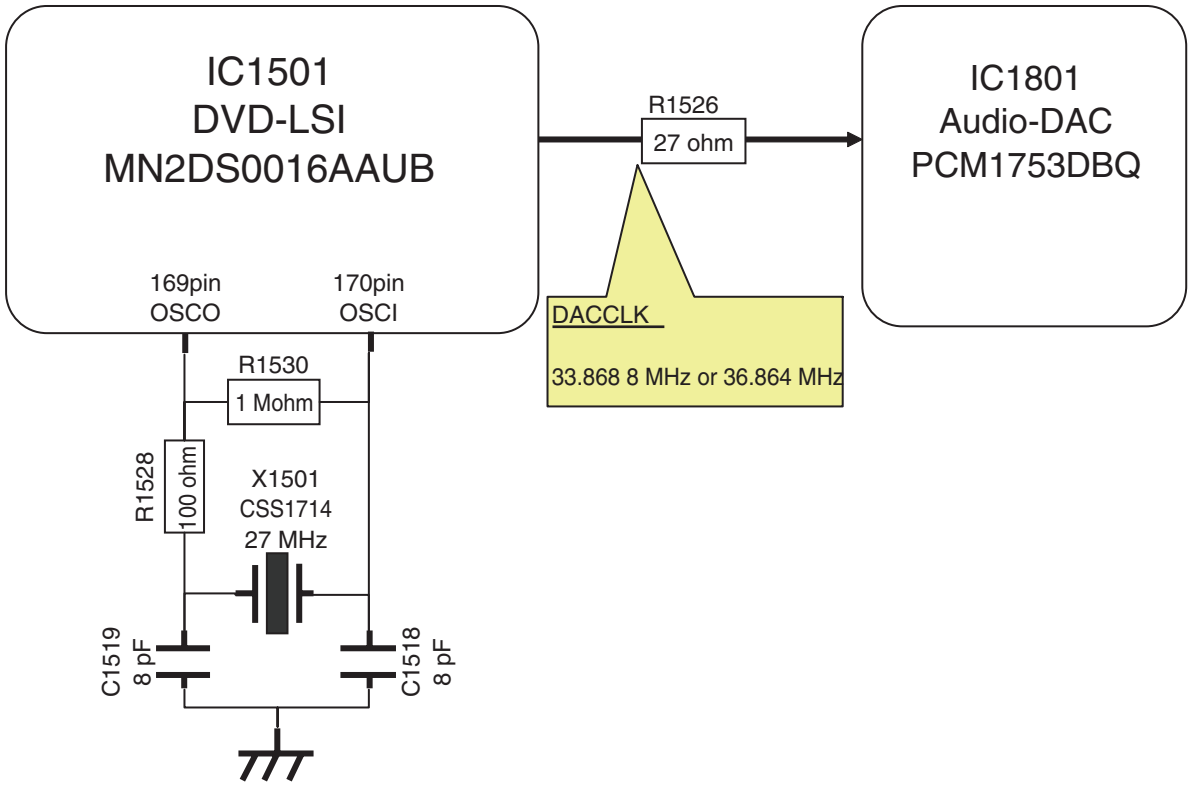

1.9 Audio circuit

[Outline]
① Analog audio signal
Serial 3 line digital output + DACCLK (audio clock) output from DVD-LSI (IC1501) are converted to analog audio signal by Audio-DAC (IC1801), and are output from HOST IF connector (CN1901). Furthermore, analog MUTE signal is also output from DVD-LSI (IC1501) via HOST IF connector (CN1901) simultaneously.
② Digital audio signal (IEC60958/IEC61937)
Digital audio signal (IEC60958/IEC61937), output from DVD-LSI (IC1501), is output via Multi-ch/Ripping IF connector (CN1851).
③ Digital multi-channel audio serial signal
Serial 6 line output from DVD-LSI (IC1501) is output via Multi-ch/Ripping IF connector (CN1851).
④ CD-DA ripping signal
Serial 3 line signal output + SUB-CODE signal, output from DVD-LSI (IC1501), are output in 4 times speed via Multi-ch/Ripping IF connector (CN1851).

[Analog audio signal]

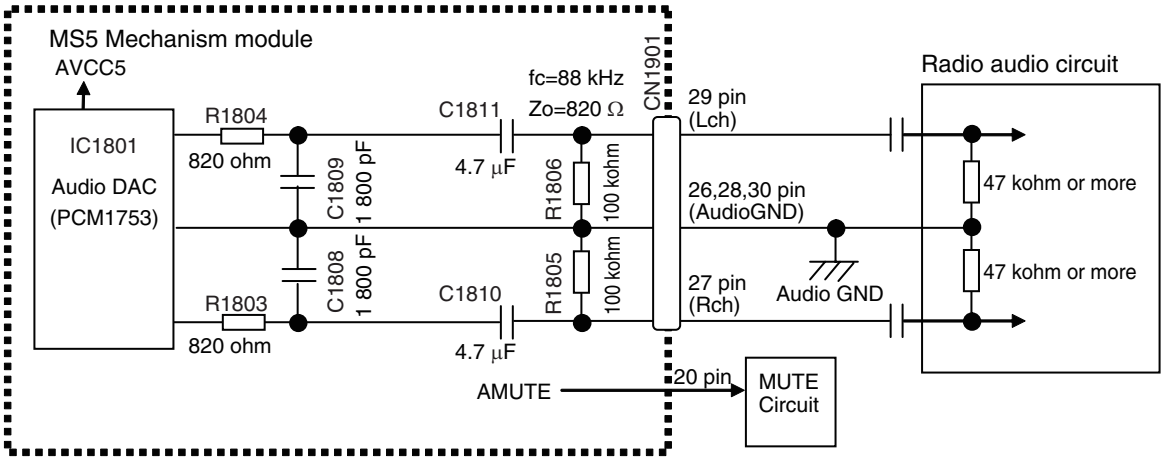

[Digital audio signal]

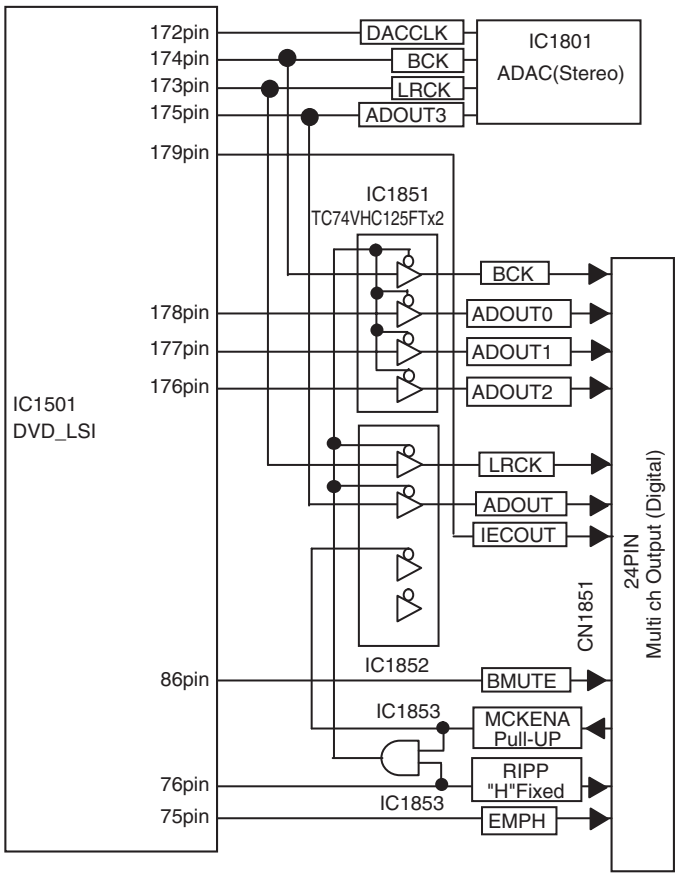

[CD-DA 4 times speed ripping signal]

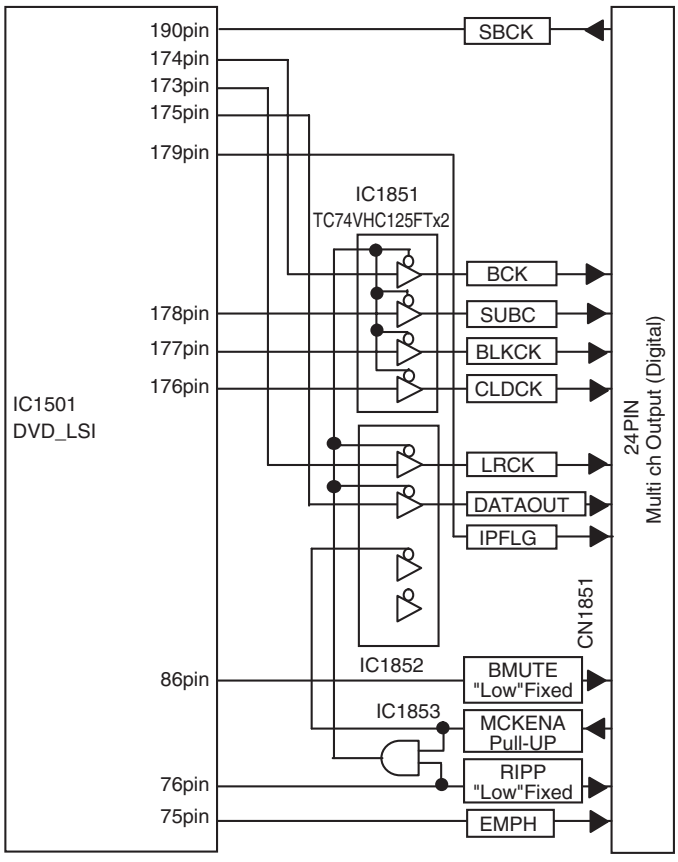

1.10 Video circuit

[Outline]
Composite signal and component signal are output from DVD-LSI (IC1501), and output from HOST IF (CN1901).
Incidentally, the buffer circuit of MS5AVcode2 model ->
CXK6631-,CXK6601-,CXK6610- and CXK6611- : No Mount, and the output signal from DVD-LSI is output as is.
CXK6630- : The buffer circuit is installed.

CXK6631-,CXK6601-,CXK6610- and CXK6611-

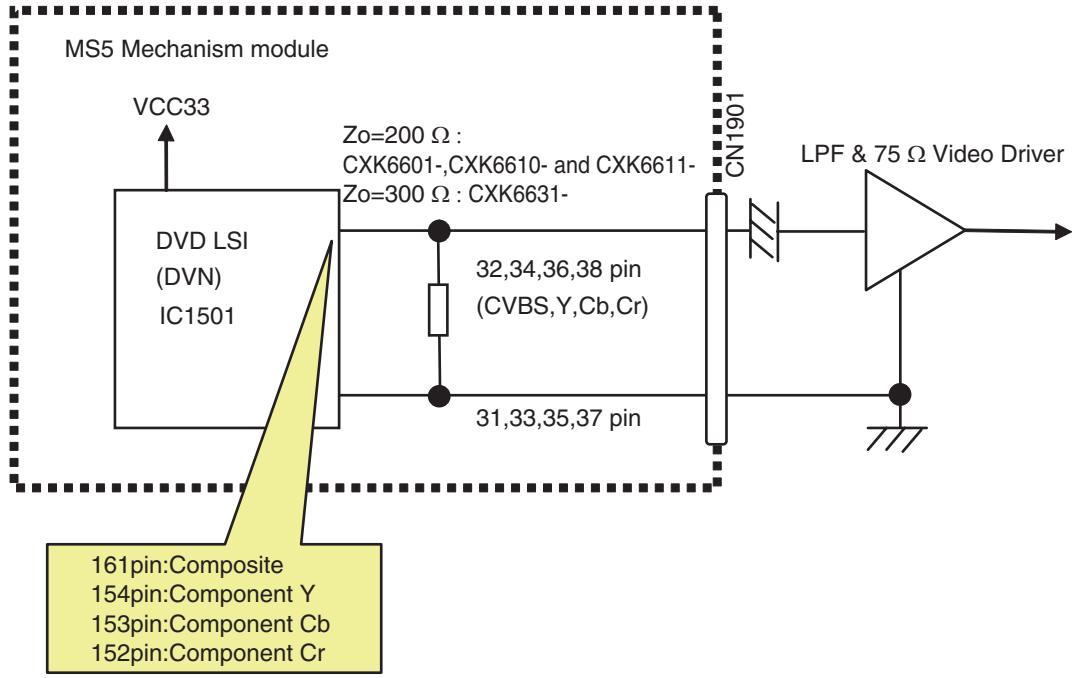

CXK6630-

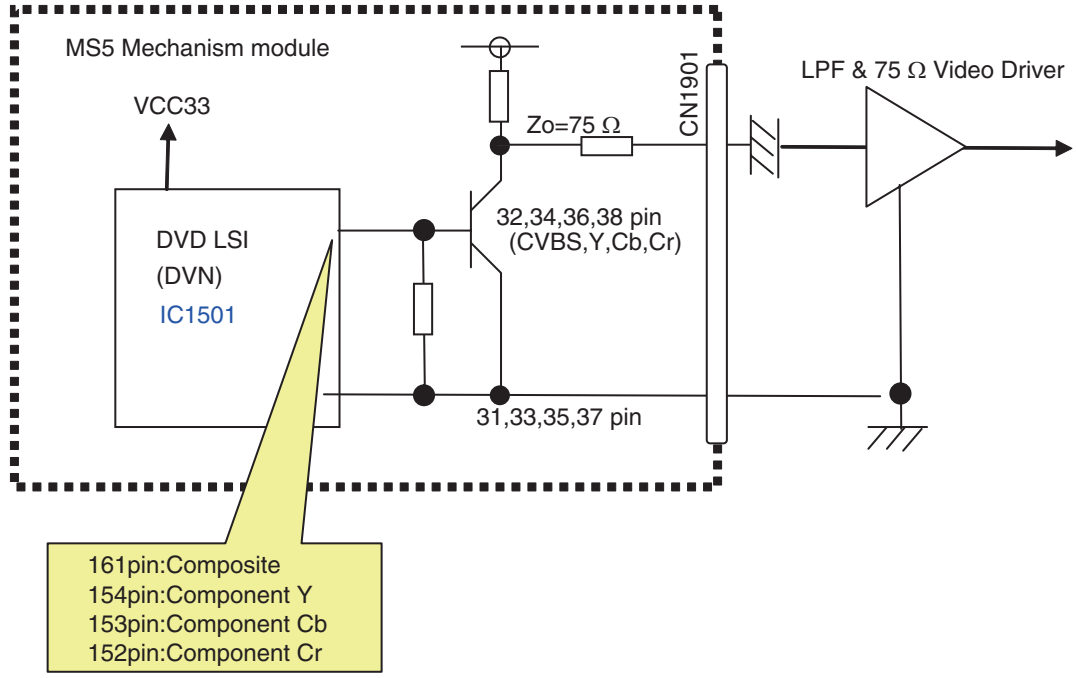

1.11 SDRAM I/F

[Outline]
It is a memory for realizing the AV decoding function of DVD-LSI (IC1501). It is used for various purposes such as buffering of stream data before decoding, working area for decoding, and storing of AV data or output data after decoding.

⦿ SDRAM interface

* When viewed from ↓ DVD-LSI

Signal Name	Bits	I/O	Description
MDQ[31:0]	32	I/O	Data bus of external SDRAM
MA[11:0]	12	O	SDRAM address
BA[1:0]	2	O	SDRAM bank address
NRAS	1	O	RAS signal of SDRAM
NCAS	1	O	CAS signal of SDRAM
NEW	1	O	Write enable signal of SDRAM
NCS	1	O	Chip select signal of SDRAM
DQM[0]	1	O	Mask signal for writing lower level byte of the lower 2 bytes in SDRAM
DQM[1]	1	O	Mask signal for writing higher level byte of the lower 2 bytes in SDRAM
DQM[2]	1	O	Mask signal for writing lower level byte of the higher level 2 bytes in SDRAM
DQM[3]	1	O	Mask signal for writing higher level byte of the higher 2 bytes in SDRAM
MCK	1	O	Clock input to SDRAM
MCKI	1	I	Clock input for data input from SDRAM

⦿ SDRAM specifications

- Data bus width: 32 bit
- Operating frequency: 121.5 MHz
- CAS latency=3
- 8 word burst transfer
- Manual precharge
- CAS before RAS refresh (Auto refresh)

⦿ SDRAM connection configuration

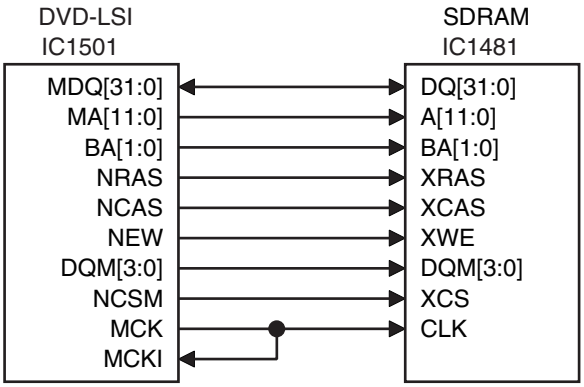

2. MECHANISM DESCRIPTIONS

Construction

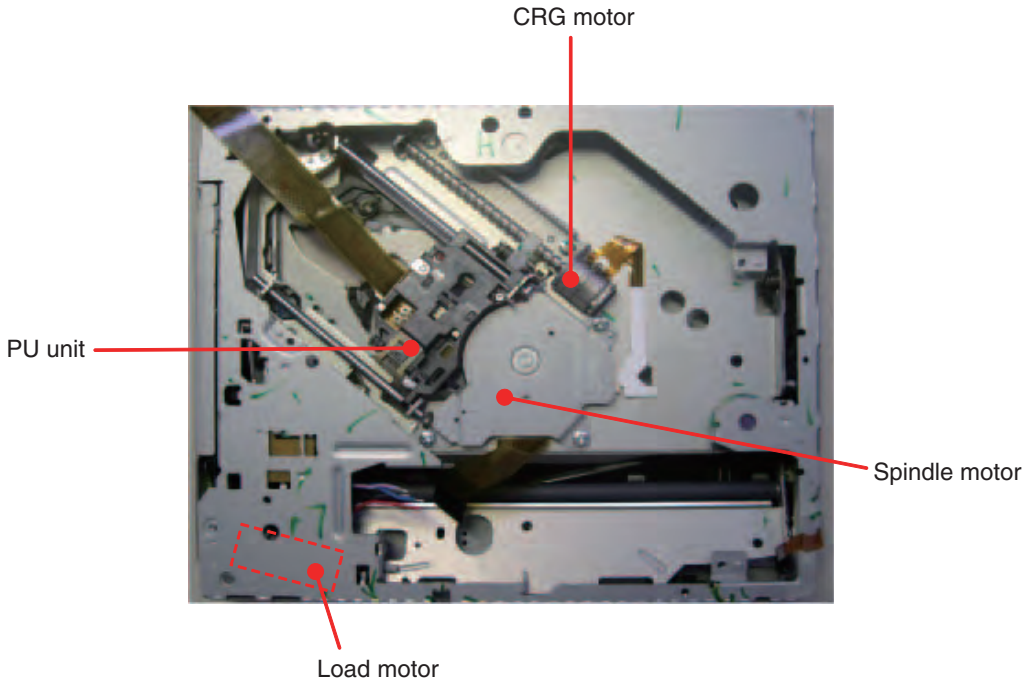

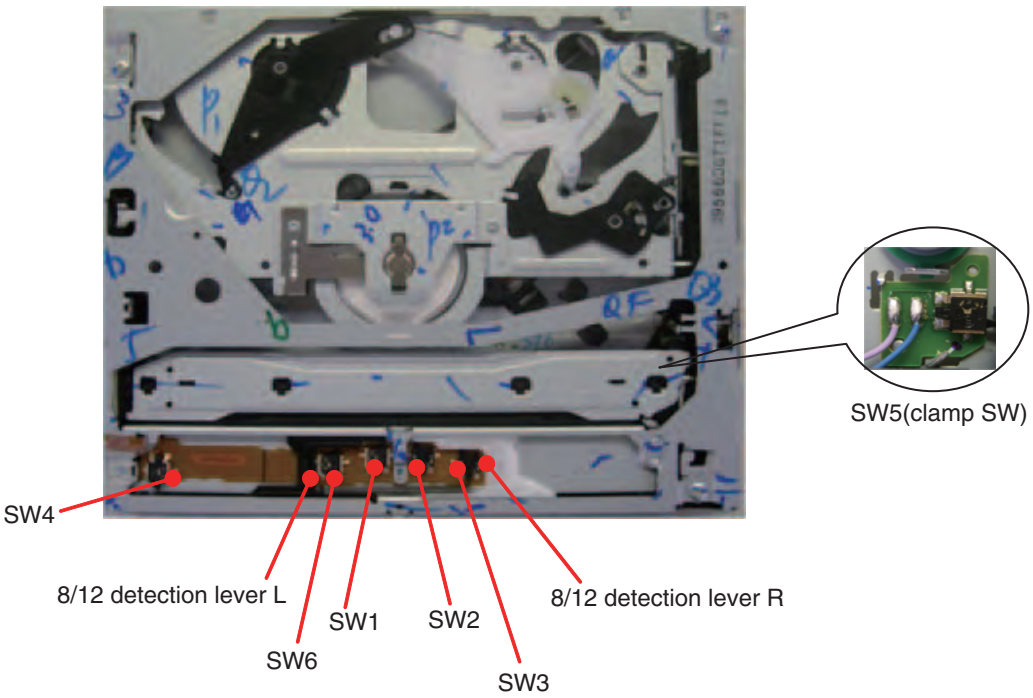

2.1 Disc loading operation

1. When the disc is loaded, 8/12 detection lever R · L will slide, either SW1 or SW2 will be ON→OFF, and the loading motor will start.
2. In the case of a 12 cm disc, the disc is transported and SW3 becomes OFF and SW4 becomes ON, and the microcomputer judges as a 12 cm disc.

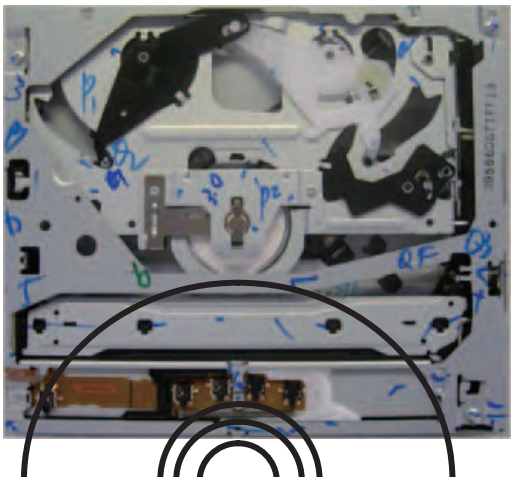

3. In the case of an 8 cm disc, even if the disc is transported, the SW3 OFF and SW4 ON state will not be realized, and the clamping motion will be taken. The microcomputer will judge as an 8 cm disc.

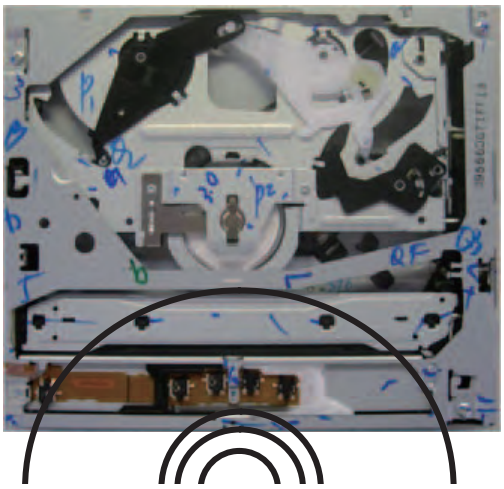

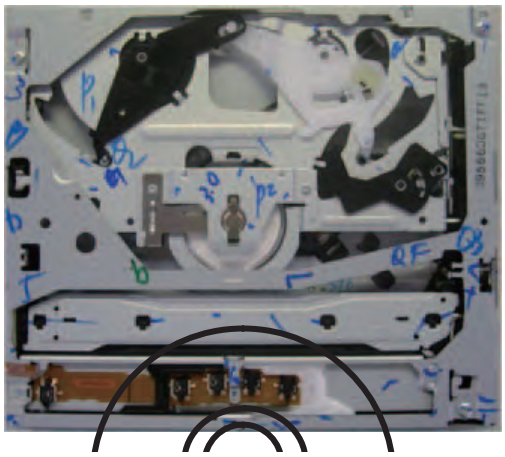

2.2 Disc centering mechanism

1. In the case of a 12 cm disc, the centering arm R・L will open by the disc being transported and both the lock arm R・L being pushed. Furthermore, the disc will be centered by the stopper of either the clamp arm or the centering arm R and stopped, and the clamping motion will be taken.

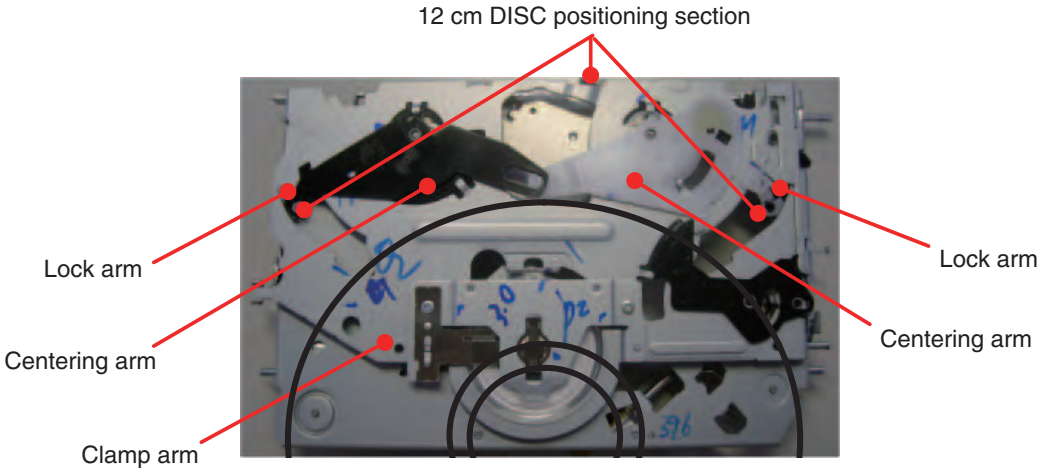

2. In the case of an 8 cm disc, if a disc is inserted being shifted to the left or the right, the disc will first hit the lock arm R or L.
   As the lock arm R and L are coupled via the centering arm R and L and the lock will not be released unless both are pushed, the disc will be restricted by the fixed lock arm and centered.
   The disc pushes out the detection arm while being centered, the disc stops at a position where the motion of the detection arm is completed, and the clamping motion will be taken.

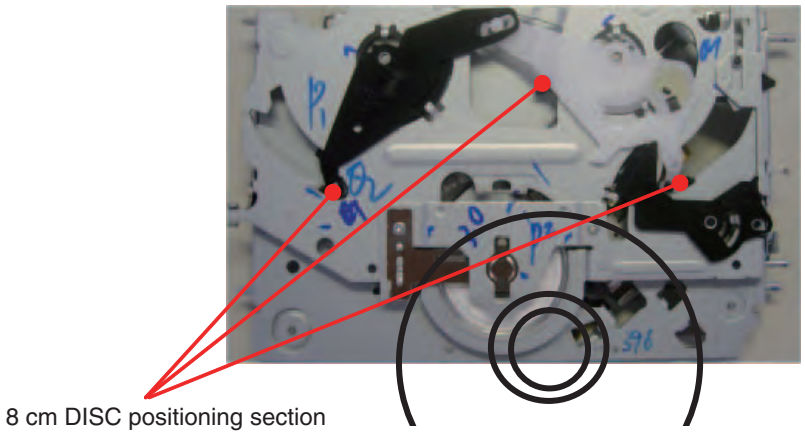

2.3 Clamping operation

1. When a disc is loaded, the clamp lever will be driven by the disc detection arm being pushed by an 8 cm or a 12 cm disc. By engagement of the jump rack and the lever driving gear, the disc clamping motion will start.

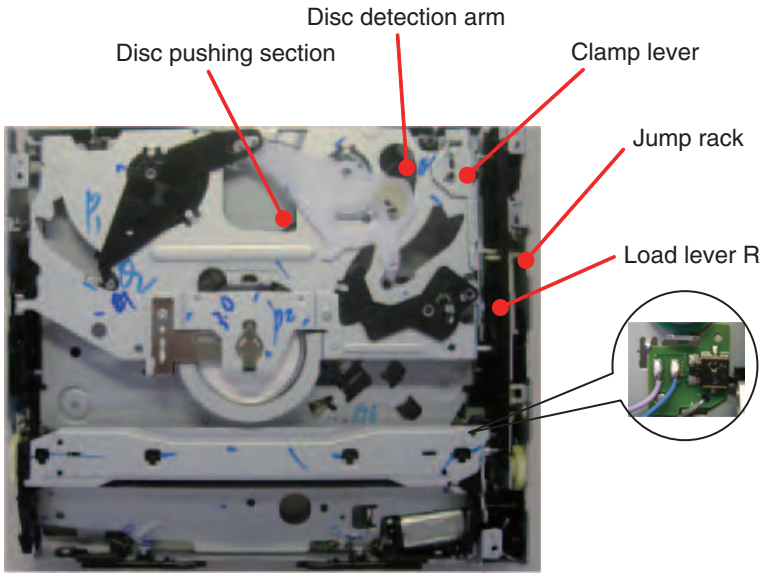

2. When the load lever R pushed by the jump rack moves to the front side of the mechanism, the roller shaft restricted by the cam of the load lever R will move downward.
And the roller shaft is also restricted by the cam of the cam ring.
The power of the roller shaft is transferred to the load lever L via the cam ring, and the load lever L will move to the front side of the mechanism.
The coupling of the load cam attached to each load lever, three shafts of the CRG chassis unit and the shaft of the clamp arm will be released, and the clamping motion will be completed at a position where the switch pushing section of the load lever R turns the clamp SW to ON.

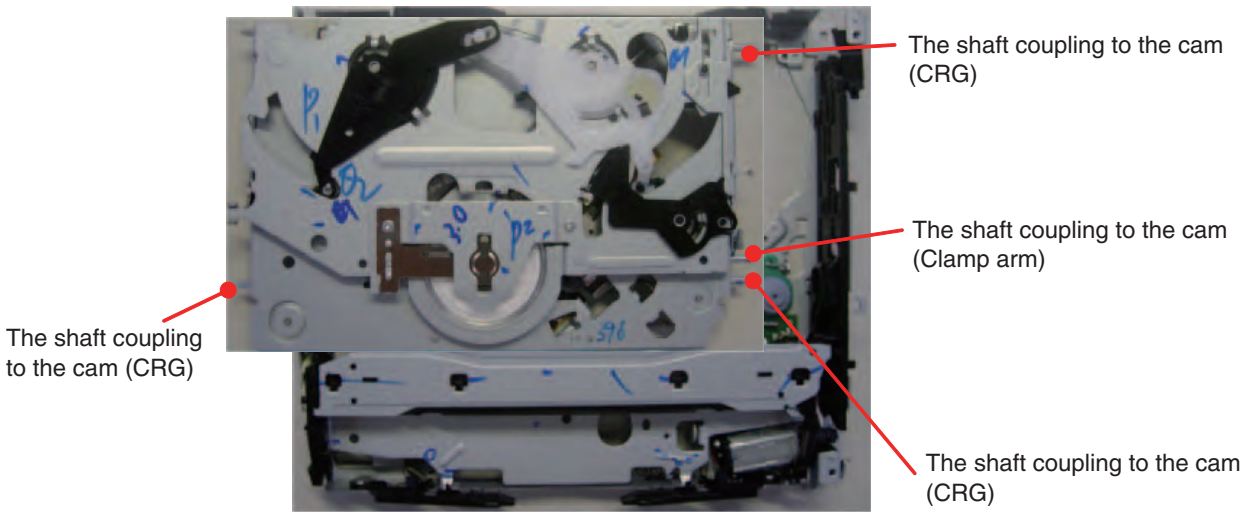

2.4 Ejection operation

1. The loading motor reverse rotates, and the ejection motion will start.
2. In the case of a 12 cm disc, the ejection will be completed by OFF→ON→OFF of SW4.
3. In the case of an 8 cm disc, the ejection will be completed when both SW3 and SW6 become ON after either SW3 or SW6 is ON→OFF.

3. DISASSEMBLY

● How to hold the mechanism section (Fig 1)

1. Hold the main frame and the top frame.
2. As the mechanical strength of the front part of the top frame is not strong, do not hold this part.
3. Do not touch the switches provided on the top face of the mechanism section.
4. Be careful not to pull the flexible PCB on the side face.

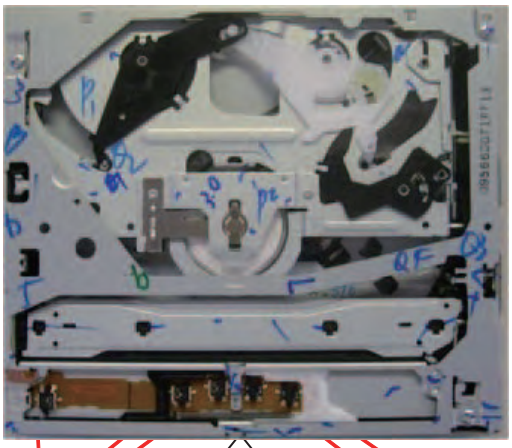

Fig 1

● How to remove the module PCB (Fig 2, Fig 3)

1. Put the mechanism section in locked state (disc load standby position).
2. Hold the mechanism module with its top face down.
3. Make the lands at 2 locations on the pick up flexible PCB short.
4. Disconnect the connectors of the pick up flexible PCB and the SPDL flexible PCB.
   (Be sure to disconnect the connectors as the flexible PCB will be damaged if the PCB is removed without removing the flexible PCB.)
5. Remove the solder joint of the lead wire of the load motor and the clamp SW.
6. Remove the two screws, and then remove the module PCB.
   (Lift up point A slightly and remove it toward B direction. Be careful as the point C is connected with a flexible PCB.)
7. Disconnect the connector of the 8-12 detection flexible PCB from the PCB.

Fig 2

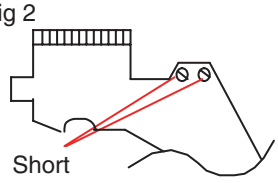

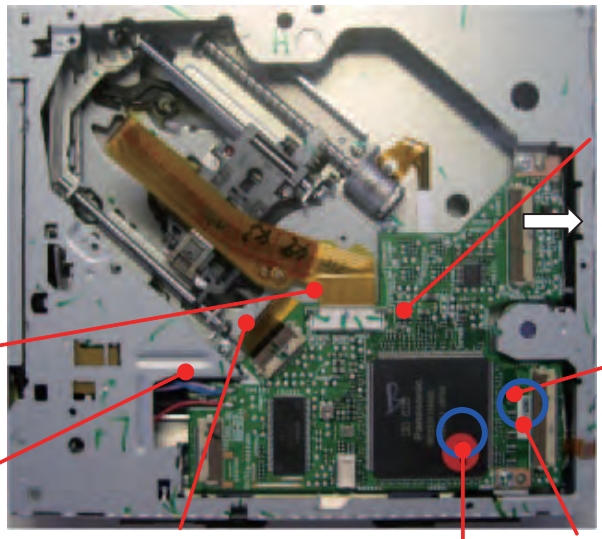

Fig 3

● How to remove the spindle motor (Fig 4)

1. Remove the module PCB according to the instructions in “How to remove the module PCB”.
2. Remove the flexible PCB of the CRG motor from the connector of the spindle motor.
3. Remove the three motor mounting screws. When mounting or removing the motor, be careful not to deform the CRG chassis.

● How to remove the CRG motor assy (Fig 4)

1. Remove the module PCB according to the instructions in “How to remove the module PCB”.
2. Remove the Mylar tape.
3. Remove the flexible PCB of the CRG motor from the connector of the spindle motor.
4. Remove the two screws, and then remove the CRG motor assy.

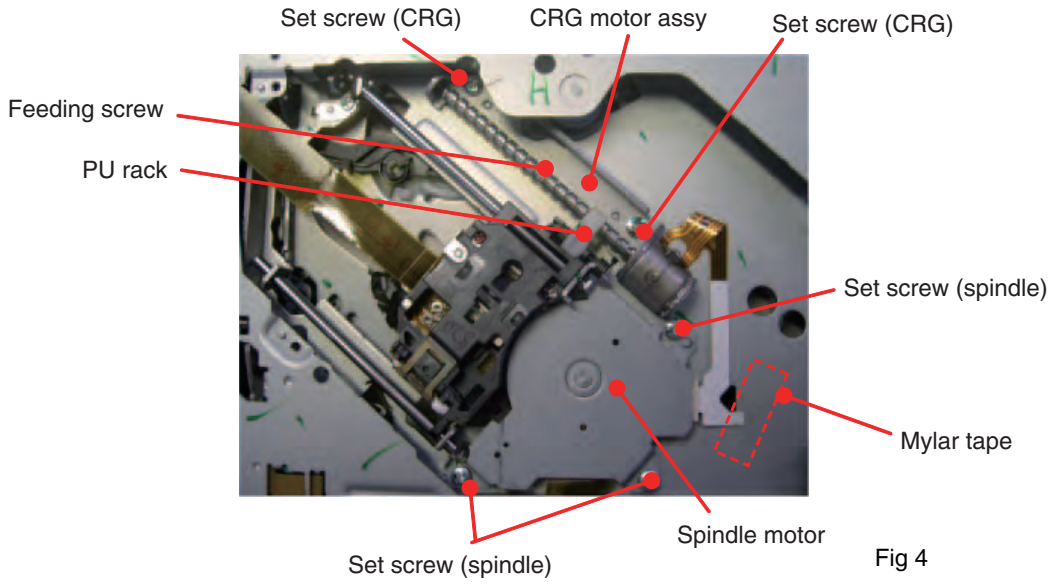

Fig 4

● How to remove the upper frame assy (Fig 5)

1. Remove the module PCB according to the instructions in “How to remove the module PCB”.
2. Remove the vibration-proof spring (right front).
3. Remove the four screws, and then remove the upper frame assy.

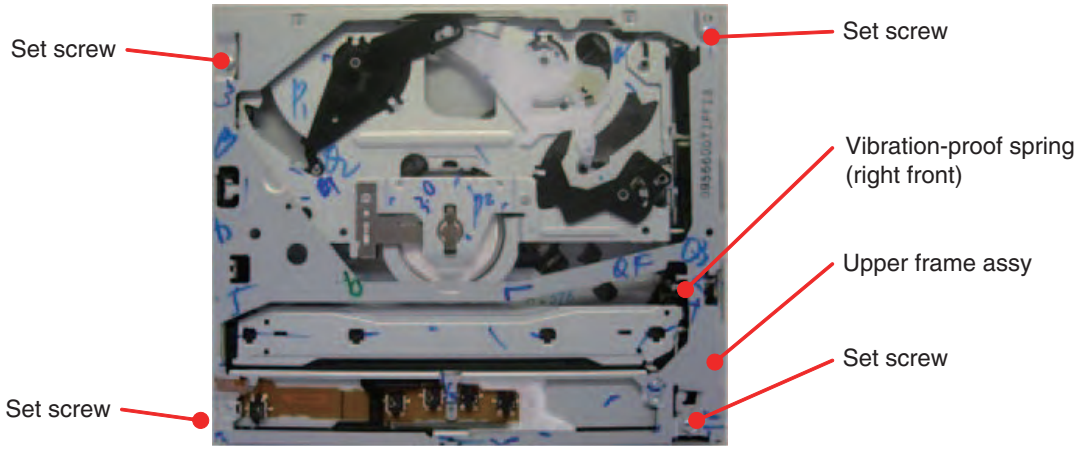

Fig 5

● How to remove the PU unit (Fig 6)

1. Remove the module PCB according to the instructions in “How to remove the module PCB”.
2. Hang the main shaft holding spring to the CRG chassis temporary hanger.
3. Remove the CRG motor assy according to the instructions in “How to remove the CRG motor assy”.
4. Remove the holding plate spring of the main shaft.
5. While lifting up the tip of the pick up rack, slide the main shaft, and remove the PU unit.

(Note) When mounting the PU unit again, make sure to do the adjustments of the devices mounted thereon according to the descriptions of the service manual. Furthermore, make sure to hang the main shaft holding spring permanently.

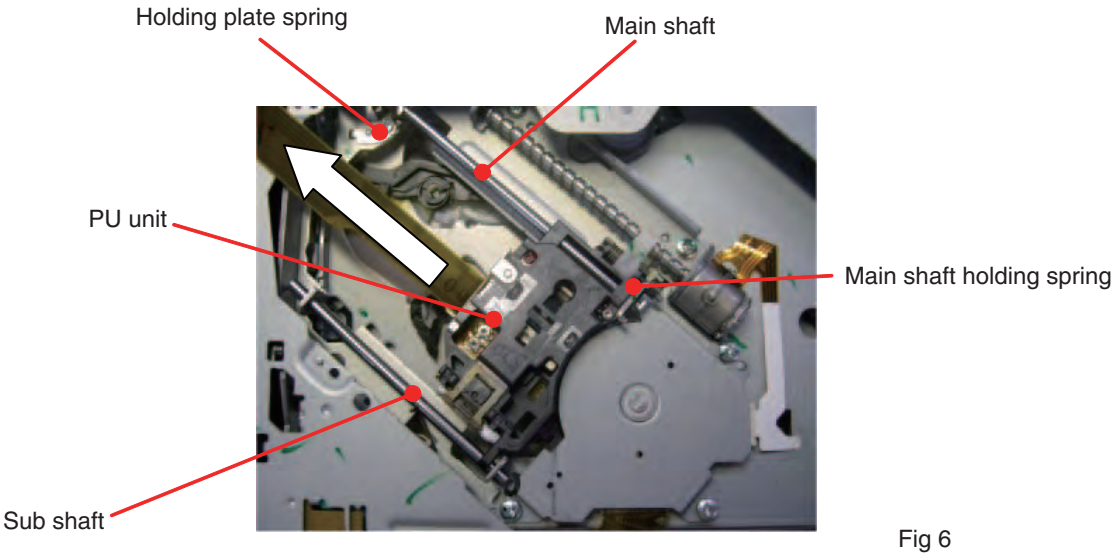

Fig 6

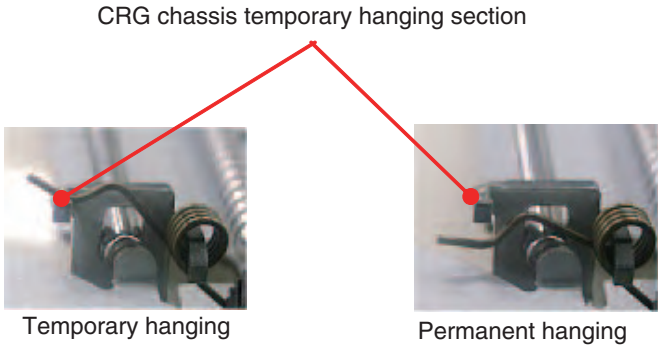

● How to remove the load gear assy (Fig 7)

1. Remove the module PCB according to the instructions in “How to remove the module PCB”.
2. Remove the upper frame assy according to the instructions in “How to remove the upper frame assy”.
3. Remove the two screws, and then remove the load gear assy.
4. Remove the jump rack and the rack attached spring.

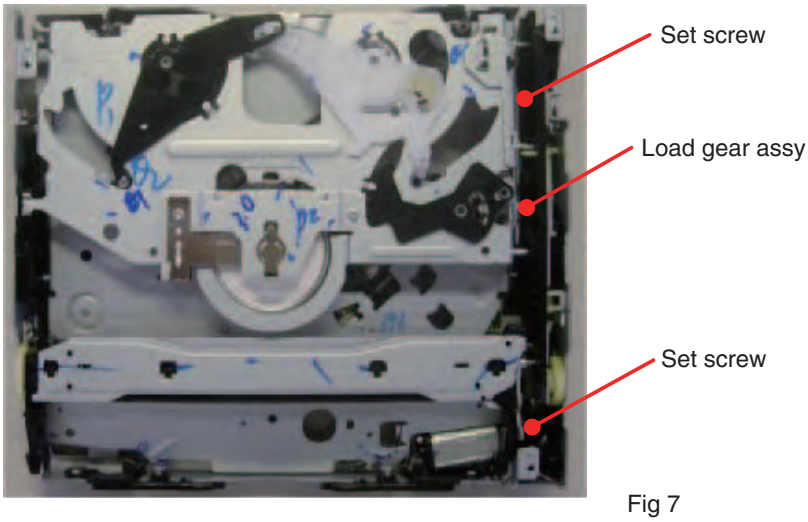

Fig 7

● How to make the empty clamp state (motor driven empty clamp) (Fig 8)

1. While driving the motor in the clamping direction, pull the clamp lever toward you.
2. Even if the clamp lever has pushed the jump rack putting it in the clamped state, continue pulling the clamp lever toward you lightly until it is stopped. It should be noted that the ejection will not work if the bar ring of the clamp lever is positioned at the center of the hook shape. (Fig 9)
3. When the clamping motion is finished, stop the motion before the convex shape of the jump rack touches the load lever R. (Fig 10)

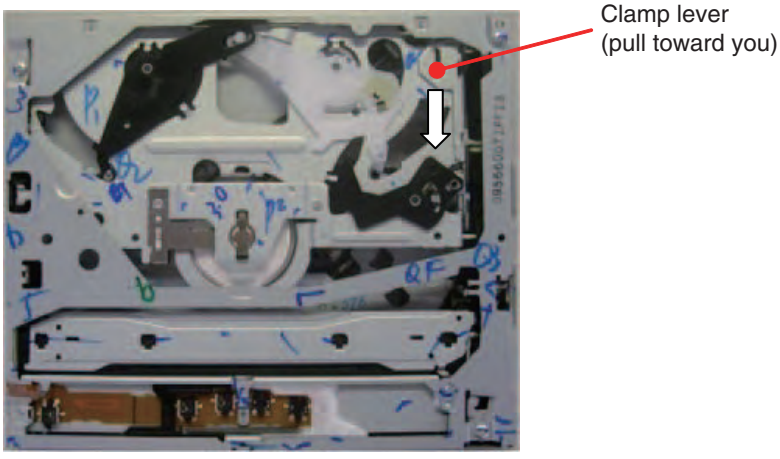

Fig 8

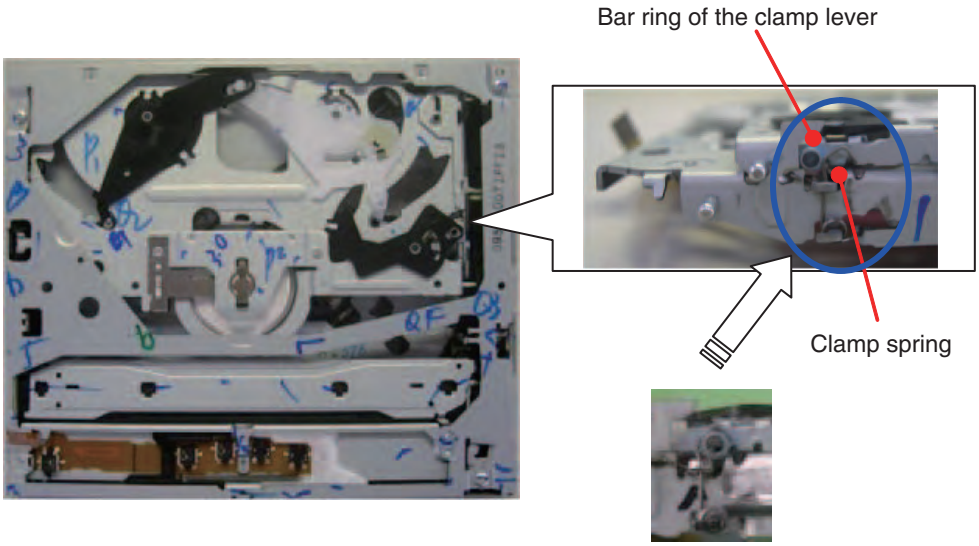

Fig 9

Make sure that the bar ring of the clamp lever does not get inside the clamp spring.

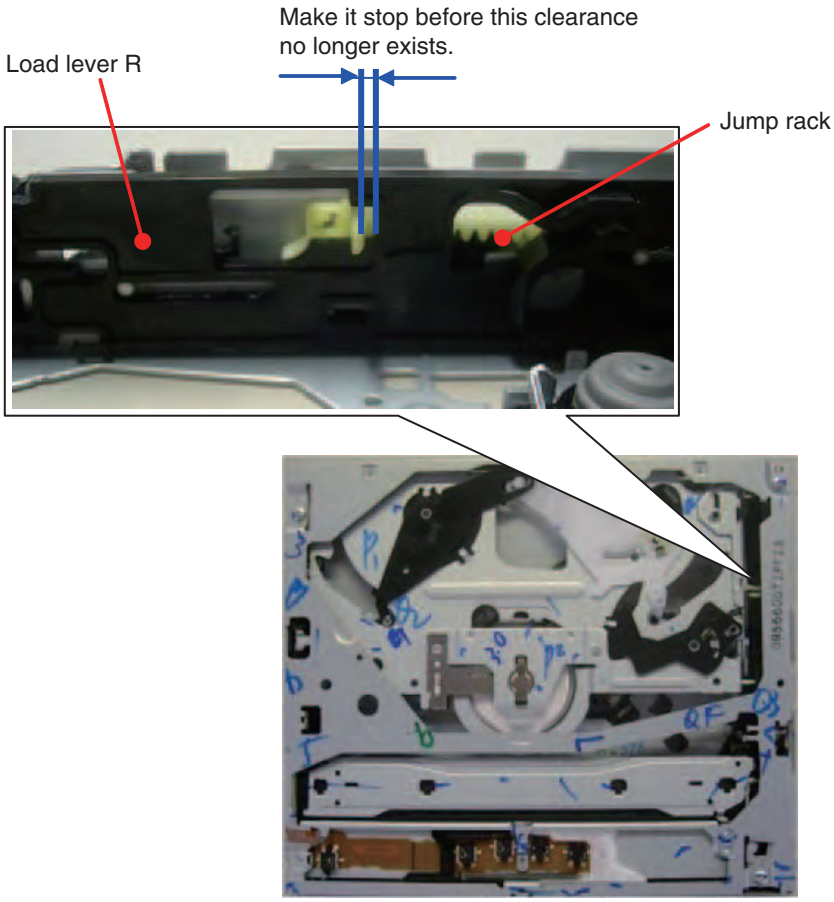

Fig 10

● How to make the empty clamp state (manual empty clamp) (Fig 11)

1. Remove the module PCB according to the instructions in “How to remove the module PCB”.
2. Remove the upper frame assy according to the instructions in “How to remove the upper frame assy”.
3. Remove the load gear assy according to the description in “How to remove the load gear assy”.
4. While pulling the clamp lever toward you, pull the slip stopper of the load lever R, and make it clamp.

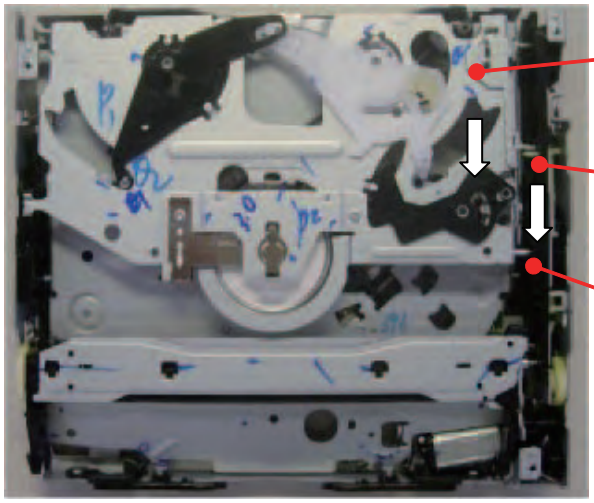

Fig 11

● How to remove the load motor assy (Fig 12)

1. Remove the module PCB according to the instructions in “How to remove the module PCB”.
2. Remove the upper frame assy according to the instructions in “How to remove the upper frame assy”.
3. Remove the load gear assy according to the description in “How to remove the load gear assy”.
4. Make the empty clamp state according to the description in “How to make the empty clamp state (manual empty clamp)”.
5. Remove the screw and then pull out the load motor assy from the side.

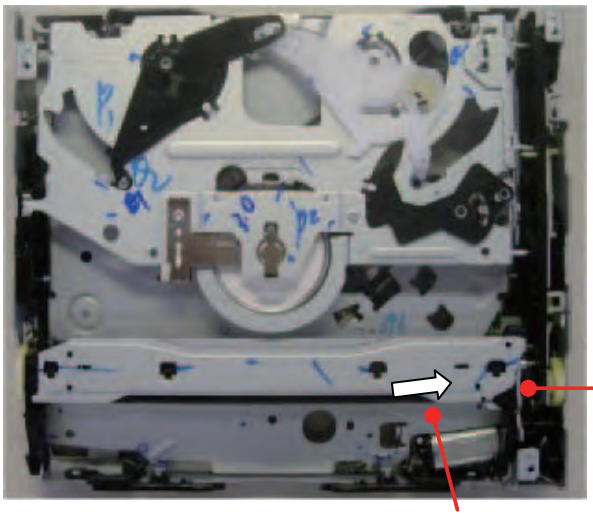

Fig 12

● How to remove the CRG assy (Fig 13)

1. Make the empty clamp state according to the description in “How to make the empty clamp state (motor driven empty clamp)”.
2. Remove the module PCB according to the instructions in “How to remove the module PCB”.
3. Remove the upper frame assy according to the instructions in “How to remove the upper frame assy”.
4. Remove the three vibration-proof springs.
5. Remove the CRG assy by lifting it up until the shaft slips out of the damper.

● How to remove the disc guide assy (Fig 13)

1. Make the empty clamp state according to the description in “How to make the empty clamp state (motor driven empty clamp)”.
2. Remove the module PCB according to the instructions in “How to remove the module PCB”.
3. Remove the upper frame ASSY according to the instructions in “How to remove the upper frame assy”.
4. Remove the two screws, and then remove the disc guide by lifting it up and placing it at 45° position and further sliding it to the left.

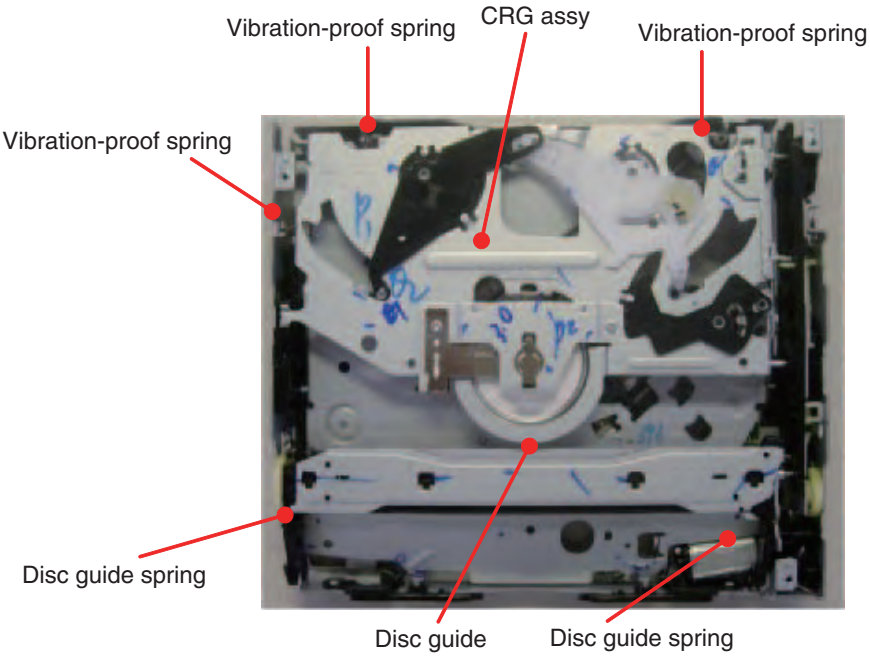

Fig 13

● How to remove the roller assy (Fig 14)

1. Remove the module PCB according to the instructions in “How to remove the module PCB”.
2. Remove the upper frame assy according to the instructions in “How to remove the upper frame assy”.
3. Remove the extension spring.
4. Remove the load gear assy according to the description in “How to remove the load gear assy”.
5. Make the empty clamp state according to the description in “How to make the empty clamp state (manual empty clamp)”.
6. Remove the disc guide assy according to the description in “How to remove the disc guide assy”.
7. Remove the CRG assy according to the description 4 and 5 in “How to remove the CRG assy”.
8. Push the slip stopper of load lever R toward the back, and move it until the end.
9. Remove the load motor assy according to the description in “How to remove the load motor assy”.
10. Remove the roller arm spring R • L.
    As for the roller arm spring R, remove only the tip hanging on the load lever R.
11. Remove the extension spring, and then remove the roller assy by lifting it up to the highest position and sliding it toward the right.

(Note) Be careful not to deform the shutter when removing the roller assy.

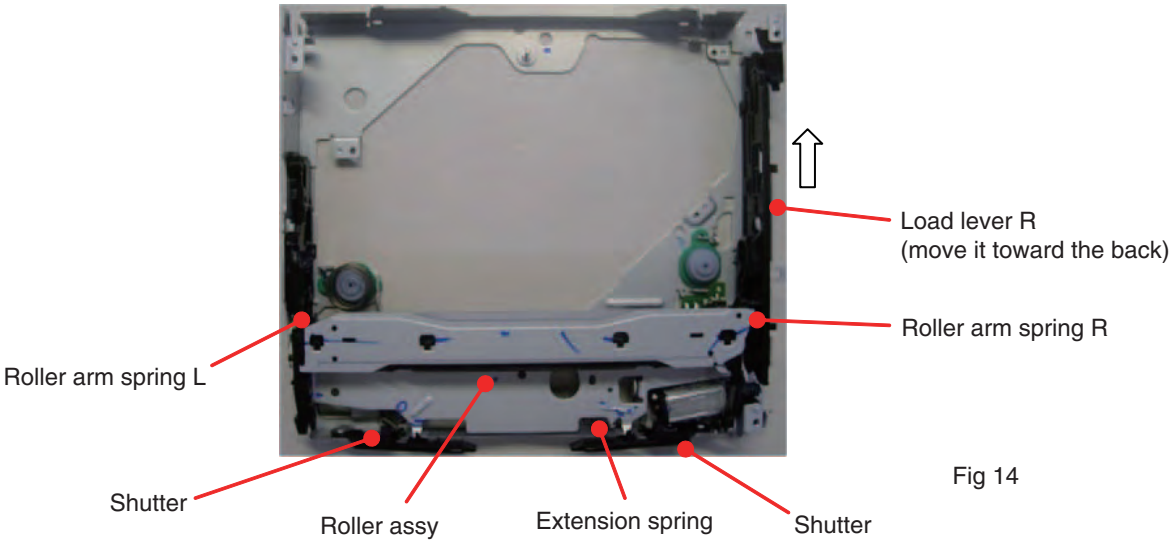

Fig 14

● How to remove the damper (Fig 15)

1. Make the empty clamp state according to the description in “How to make the empty clamp state (manual empty clamp)”.
2. Remove the module PCB according to the instructions in “How to remove the module PCB”.
3. Remove the upper frame assy according to the instructions in “How to remove the upper frame assy”.
4. Remove the three vibration-proof springs.
5. Remove the CRG assy according to the description 4 and 5 in “How to remove the CRG assy”.

6.1 Release the clinch by holding the A section of the damper attached to the main frame using a pair of pliers and lifting it up toward B direction.
(As there will be a gap made at section C, remove the damper.)

6.2 Insert a screwdriver into section D, release the clinch by lifting up a metal plate on the other side, and remove the damper.

7.1 Remove the CRG motor assy according to the description 3 and 4 in “How to remove the CRG motor assy”.

7.2 Remove the damper.

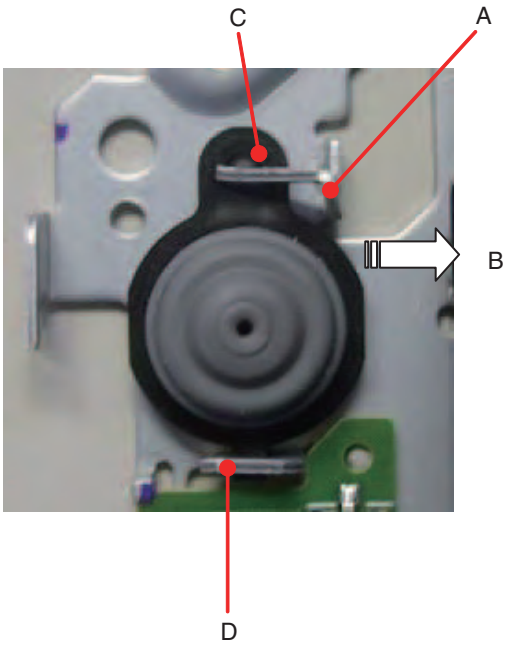

Fig 15